SINCE 1977

R01

Explosion Drawing
Desenho de Explosão



ESPRESSO COFFEE MACHINE • MÁQUINA CAFÉ ESPRESSO

ASTROLAB 2 MB TC .24
ASTROLAB 2 MB .24

20210317

www.fiamma.pt

This drawing may be altered without previous notice.
Os elementos deste desenho podem ser alterados sem aviso prévio.

MÁQ. CAFÉ ASTROLAB 2 MB. 24

ESPRESSO COFFEE MACHINE ASTROLAB 2 MB .24

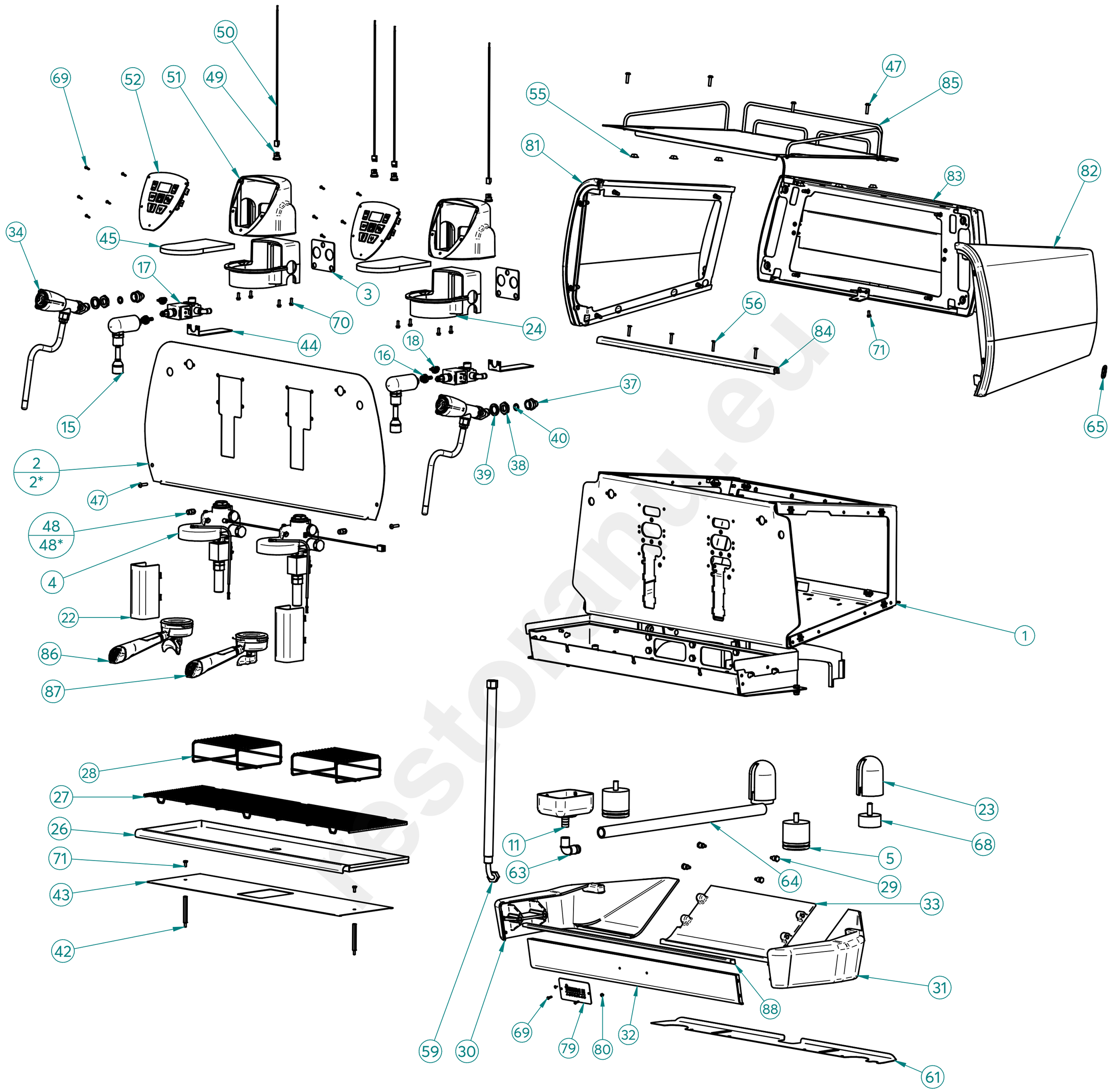

Restoran.eu

fiamma · RST · TÜVRheinland CERTIFIED Management System ISO 9001:2015 www.tuv.com ID 9108624282

www.fiamma.pt

This drawing may be altered without previous notice.
Os elementos deste desenho podem ser alterados sem aviso prévio.

MÁQ. CAFÉ ASTROLAB 2 MB. 24

ESPRESSO COFFEE MACHINE ASTROLAB 2 MB .24

COMPONENTES INTERNOS
(INTERNAL COMPONENTS)

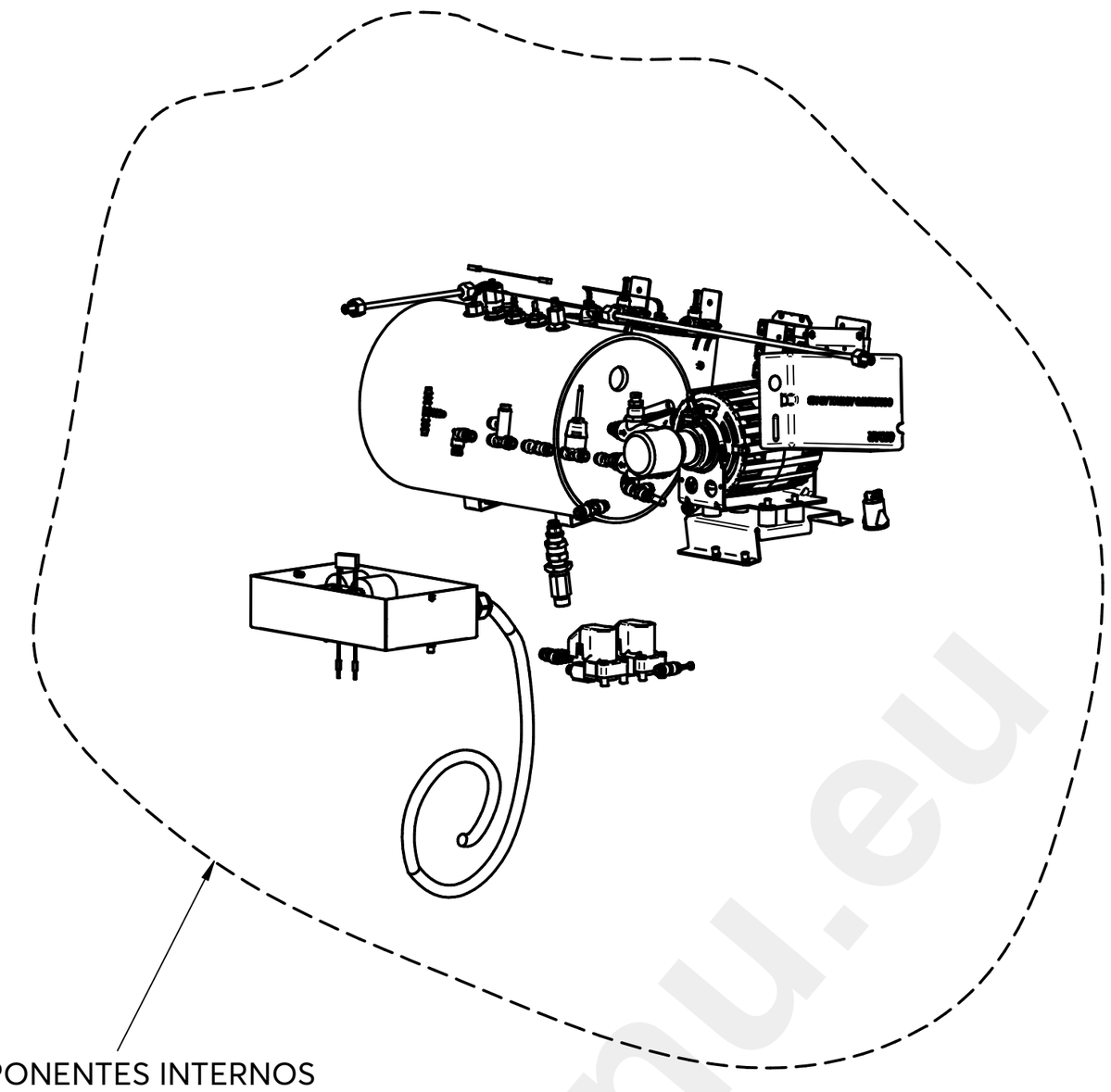

COMPONENTES INTERNOS
(INTERNAL COMPONENTS)

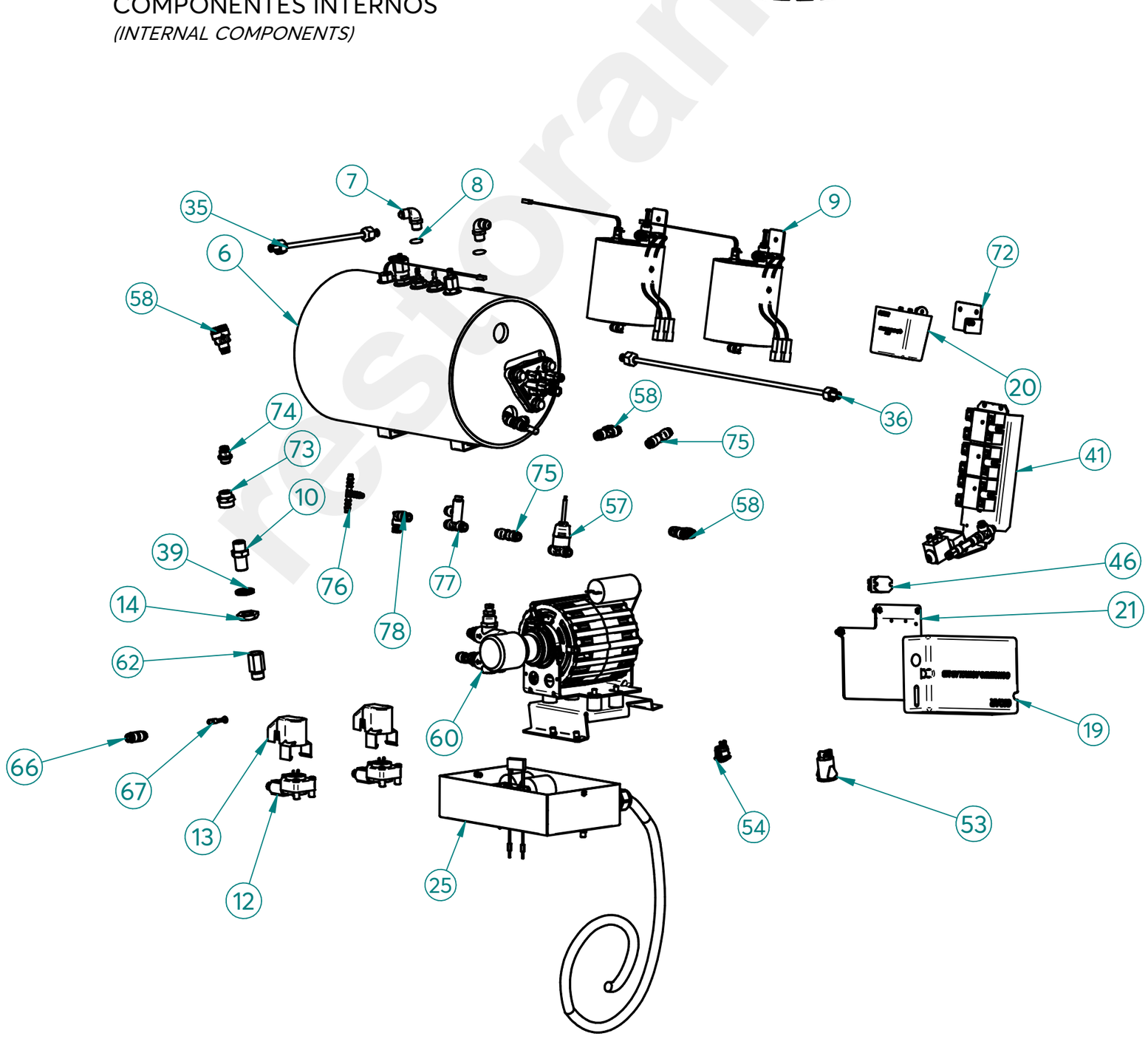

restoranu.eu

MÁQ. CAFÉ ASTROLAB 2 MB. 24

ESPRESSO COFFEE MACHINE ASTROLAB 2 MB .24

LISTA DE COMPONENTES E ACESSÓRIOS

Spare parts list

ITEM Nº	CÓDIGO	DESIGNAÇÃO	DESIGNATION	QUANT.
1	PRE-MONTAGEM	PM-CHASSI CONJ. ASTROLAB 2	PM-OUTER CASING ASS. ASTROLAB 2	1
2	7.0.037.0040	PAINEL FRONTAL ASTROLAB 2 TC	FRONT PANEL ASTROLAB 2 TC	1
3	4.0.028.0002	JUNTA GRUPO ECC-07	ECC-07 GROUP GASKET	2
4	7.0.037.0134-B	GRUPO CONJ. ASTROLAB MB	GROUP ASSEMB. ASTROLAB MB	2
5	4.0.000.0804	PE MAQ. DE CAFE 60x60	FEET FOR COFFE MACHINE 60X60	2
6	PRE-MONTAGEM	PM-CALDEIRA 10,5LT MB C/ ACESSORIOS CONJ. V24	10,5LT MB BOILER W/ ACESS. ASS.	1
7	4.0.000.0085	RACORD INJECÇÃO	INJECTION RACORD	2
8	4.0.000.0013	ANILHA 13x17MM (G1/4) COBRE	GASKET G1/4 CU	2
9	7.0.037.0111	CALDEIRA INOX 0,5LT 1500W CONJ. NV ASTROLAB	1500W 0,5L SS BOILER ASS. ASTROLAB	2
10	4.0.000.0043	RACORD G3/8-G3/8 (FILTRO ENT. AGUA)	RACORD G3/8-G3/8 (WATER INLET FILTER)	1
11	4.0.000.0840	DEPOSITO ESGOTO PLASTICO	DRAIN TRAY	1
12	PRE-MONTAGEM 2	CONTADOR VOLUMETRICO CONJ. COMPASS MB	VOLUMETRIC COUNTER ASS. COMPASS MB	2
13	5.0.000.1013	BLINDAGEM CONTADOR VOLUMETRICO	SHIELD VOLUMETRIC DOSER	2
14	4.0.160.0063	PORCA G3/8 LATAO NIQ. (SEXT. 27MM)	NIQ. NUT G3/8 (27MM)	1
15	7.0.037.0105	TORNEIRA AGUA CONJ. ASTROLAB	WATER TAP ASSEMB. ASTROLAB	2
16	4.0.000.0091	ADAPTADOR G1/4 TUBO Ø6	G1/4 ADAPTER Ø6 PIPE	2
17	7.0.037.0126	ELECTROVALVULA MISTURADORA CONJ. ASTROLAB	MIX SOLENOID VALVE ASSEMB. ASTROLAB	2
18	4.0.000.0103-A	RACORD L G1/8-TUBO Ø4	"L" FITTING G1/8-TUBO Ø4	2
19	4.0.000.0883	UNIDADE ELECTRONICA CONCERTO DISPLAY LCD ASTROLAB MB	CONTROL BOX CONCERTO DISPLAY LCD ASTROLAB MB	1
20	4.0.000.0885	FONTE ALIMENTAÇAO 100-240VAC/24VDC-20W	100-240VAC/24VDC-20W POWER SUPPLY	1
21	7.0.037.0056	SUPORTE UNIDADE ELECT. CONCERTO ASTROLAB	CONTROL BOX SUPPORT ASTROLAB	1
22	4.0.037.2010	BLINDAGEM ELECTROVALVULA GRUPO ASTROLAB V24	GROUP ELECTROVALVE SHIELDING V24	2
23	7.0.037.0029	PROTEÇAO PE POSTERIOR CROM. ASTROLAB	REAR FOOT PROTECTION ASTROLAB	2
24	7.0.037.0009-A	BLINDAGEM INFERIOR GRUPO ASTROLAB MB	ASTROLAB GROUP INFERIOR COVER	2
25	7.0.037.0122	CAIXA LIGADOR/CONTACTOR CONJ. ASTROLAB	MAIN SWITCH/CONTACTOR ASTROLAB	1
26	7.0.037.0025	TABULEIRO INFERIOR ASTROLAB 2	LOWER TRAY ASTROLAB 2	1
27	4.0.037.0030	GRELHA TABULEIRO INF. ARAME ASTROLAB 2	WIRE TRAY GRID ASTROLAB 2	1
28	4.0.037.0038-A	GRELHA ARAME CHAVENAS ASTROLAB	CUPS GRID ASTROLAB	2
29	4.0.037.0081	PARAFUSO FIXAÇÃO PAINEL POST. INF ASTROLAB	SCREW REAR LOWER PANEL ASTROLAB	4
30	4.0.037.0002	PAINEL LATERAL INFERIOR ESQ. ASTROLAB	LEFT DOWN SIDE PANEL ASTROLAB	1
31	4.0.037.0001	PAINEL LATERAL INFERIOR DIR. ASTROLAB	RIGTH DOWN SIDE PANEL ASTROLAB	1
32	4.0.037.0003	PAINEL FRONTAL INFERIOR ASTROLAB 2	FRONT DOWN PANEL ASTROLAB 2	1
33	4.0.037.0004	PAINEL POSTERIOR INFERIOR ASTROLAB 2	REAR DOWN PANEL ASTROLAB 2	1
34	PRÉ-MONTAGEM	PM-TORNEIRA MEIA VOLTA VAPOR CONJ. ASTROLAB	COOL TOUCH TAP ASSEMB. ASTROLAB	2
35	4.0.037.2000	TUBO CALDEIRA TORN. VAPOR ESQ. ASTROLAB/VELA	STEAM BOILER LEFT TAP TUBE ASTROLAB/VELA	1
36	7.0.028.1106	TUBO TORNEIRA VAPOR ESQ. PACIFIC 2 MB	LEFT STEAM TAP TUBE PACIFIC 2 MB	1
37	4.0.000.0119	RACORD G3/8F-G1/4 P/ TUBO REBORD.	G3/8-G1/4 FITTING FOR PIPE	2
38	4.0.037.0166	PORCA G3/8 LATAO (SEXT. 24MM) TORN. CROM. RST	G3/8 CHROMED BRASS NUT	2
39	4.2.000.9140	ANILHA RECART. M16 ZINC. DIN6798A	TOOTHED WASHER M16 DIN6798A	3
40	4.0.000.0121	ORING 9,92X2,62 VITON	ORING 9,92X2,62 VITON	2
41	7.0.037.0114	RELES / ELECTROV. ENTRADA AGUA CONJ. ASTROLAB 2	RELAYS/ELECTOV. WATER INLET ASTROLAB 2	1
42	4.0.037.0112	APOIO BLINDAGEM CV CX INT. GERAL ASTROLAB	SUPPORT SHIELDING MAIN SWITCH ASTROLAB GENERAL	2
43	7.0.037.0020	BLINDAGEM CV CAIXA INT. GERAL ASTROLAB 2	SHIELD MAIN SWITCH ASTROLAB 2	1
44	7.0.037.0058	SUPORTE ELECTROV. MIST. ÁGUA ASTROLAB	ASTROLAB WATER SOLENOID SUPPORT	2
45	4.0.037.0108	ISOLAMENTO GRUPO ASTROLAB	GROUP ISOLATION ASTROLAB	2
46	4.0.000.1000	RELE ESTATICO 25A FASTON 6,3X0,8	STATIC RELAY 25A FASTON 6,3X0,8	1
47	4.2.000.9620	PARAFUSO CAB. OVAL UMBR. M5X20 INOX	M5X20 SS HEXAGON SOCKET BUTTON HEAD SCREW	6
48	4.0.000.0100	RACORD G1/8 TUBO TEFLON ø4	ø4 G1/8 TEFLON TUBE RACORD	2
49	4.0.007.0040	LED BRANCO Ø16MM 0,36W 12V	WHITE LED LIGHT ø16MM 0,36W 12V	4
50	4.0.007.0044	CABO LED BRANCO Ø16MM LIGADOR	WHITE LED CABLE Ø16MM TERMINAL BLOCK	4
51	4.0.037.0006	BLINDAGEM SUPERIOR GRUPO S/ E-LEVER ASTROLAB	ASTROLAB UPPER GROUP SHIELDING	2
52	4.0.000.1023	TECLADO 7T C/ AGUA DOSEADA E DISPLAY LCD FIAMMA	PUSH-BUTTON 7 BTS W/ AUT. WATER AND LCD DISPLAY FIAMMA	2
53	5.0.000.0238	INTERRUPTOR AMARELO (GRUPO)	YELLOW SWITCH (GROUP)	1
54	4.0.000.0511	INTERRUPTOR UNIPOLAR TERM. 4,8	UNIPOLAR PUSH-BUTTON TERM. 4,8	1
55	4.0.000.0917	PE ADESIVO 5,8MM	ADHESIVE FOOT 5,8MM	6
56	4.2.000.9131	PARAFUSO CAB. EMB. PH M4X20 ZINC. DIN965	SCREW M4X20 DIN965	4
57	7.0.037.0100	SENSOR DE PRESSAO CONJ. TUBO TEFLON Ø6 - 4 PIN	PRESSURE SENSOR TUBE Ø6-4PIN	1
58	4.0.000.0098	CONECTOR RAPIDO Y TUBO ø6	Y CONNECTOR TUBE ø6	3
59	4.0.000.0818	TUBO ALIMENTAÇÃO C/ CURVA 1500MM	WATER INLET PIPE 1500MM	1
60	PRE-MONTAGEM	PM-MOTOR RPM CONJ. ASTROLAB MB	PM-MOTOR RPM OUTDOOR ASS. ASTROLAB	1
61	7.0.037.0008	BLINDAGEM FUNDO ASTROLAB 2	BOTTOM SHIELD ASTROLAB 2	1
62	4.0.000.0040	PORTA FILTRO ENT. AGUA C/ FILTRO NIPLESS	FILTER HOLDER OF WATER INLET	1
63	4.0.000.0845	RACORD L DEPOSITO ESGOTO PLASTICO	ANGLE RACORD	1

Management System ISO 9001:2015 TÜVRheinland CERTIFIED www.tuv.com ID 9108624282

www.fiamma.pt

This drawing may be altered without previous notice.
Os elementos deste desenho podem ser alterados sem aviso prévio.

MÁQ. CAFÉ ASTROLAB 2 MB. 24

ESPRESSO COFFEE MACHINE ASTROLAB 2 MB .24

LISTA DE COMPONENTES E ACESSÓRIOS

Spare parts list

ITEM Nº	CÓDIGO	DESIGNAÇÃO	DESIGNATION	QUANT.
64	4.0.000.0222	TUBO ESGOTO	DRAIN TUBE	1
65	4.0.037.0123	AUTOCOLANTE ON/OFF ASTROLAB	ON/OFF STICKER ASTROLAB	1
66	4.0.000.0097	CONECTOR RAPIDO TUBO ø6	FAST TUBE CONNECTOR ø6	1
67	4.0.000.0093	TAMPAO TUBO ø6	TUBE COVER ø6	1
68	4.0.000.0799	PE MAQ. CAFE BORRACHA Ø50x25 - M10	FEET FOR COFFE MACHINE Ø50X25-M10	2
69	4.2.000.9618	PARAFUSO CAB. OVAL UMBR. M3X10 INOX	SCREW M3x10	12
70	4.2.000.9113	PARAFUSO ROSCA PLASTICO K40X12 ZINC.	SCREW K40X12	8
71	4.2.000.9646	PARAFUSO CAB. SEXT. M4X10 INOX DIN933	SCREW M4X10 DIN933	3
72	7.0.037.0055	SUPORTE FONTE 24V ASTROLAB MB	POWER SUPPLY 24V SUPPORT ASTROLAB MB	1
73	4.0.000.0116	RACORD G1/4F-G3/8F NIQ.	G1/4F-G3/8F NICKEL RACORD	1
74	4.0.000.0099	RACORD G1/4 TUBO ø6	FITTING G1/4 - Ø6 PIPE	1
75	5.0.042.0010	VALVULA ANTI-RETORNO TUBO Ø6	NON RETURN VALVE TUBE Ø6	2
76	4.0.000.0096	CONECTOR RAPIDO T TUBO Ø6	T QUICK CONNECTOR TUBE Ø6	1
77	5.0.042.0013	VALVULA DE EXPANSÃO TUBO Ø6	EXPANSION VALVE TUBE Ø6	1
78	4.0.000.0113	RACORD L TUBO Ø6	"L" FITTING - ø6 PIPE	1
79	4.0.037.0155	PAINEL PERSONALIZADO FRONTAL NV ASTROLAB	ASTROLAB PERSONALIZED PANEL	1
80	4.2.000.9170	PORCA M3 ZINC. DIN934	M3 NUT ZINC. DIN934	2
81	PRE-MONTAGEM	PM-PAINEL LATERAL ESQ. CONJ ASTROLAB	PM-LEFT SIDE PANEL ASS. ASTOLAB	1
82	PRE-MONTAGEM	PM-PAINEL LATERAL DIR. CONJ. ASTROLAB	PM-RIGHT SIDE PANEL ASS. ASTOLAB	1
83	PRÉ-MONTAGEM	PM-PAINEL POSTERIOR CONJ. ASTROLAB 2 V24	ASTROLAB 2 V24 BACK PANEL ASSEMB.	1
84	4.0.037.0028	FRONTAL SUPERIOR ASTROLAB 2	UPPER FRONT ASTROLAB 2	1
85	PRE-MONTAGEM	TABULEIRO SUP. CONJ. ASTROLAB 2	UPPER TRAY ASSEMB. ASTROLAB 2	1
86	5.0.000.0630	PORTA FILTRO INOX CONJ. RST BRANCO - 2 BICAS	FILTER HOLD. REINF. ASSEMB. RST WHITE - 2 COFFEE CUP	2
87	5.0.000.0627-A	PORTA FILTRO INOX CONJ. RST BRANCO - 1 BICA	FILTER HOLD. REINF. ASSEMB. RST WHITE - 1 COFFEE CUP	1
88	7.0.037.0203	PROTEÇÃO PAINEL FRONT. INF. ASTROLAB 2	FRONT DOWN PANEL PROTECTION ASTROLAB 2	1

LISTA DE COMPONENTES E ACESSÓRIOS OUTRAS VERSÕES

Spare parts list other versions

ITEM Nº	CÓDIGO	DESIGNAÇÃO	DESIGNATION	MOD./MODEL	QUANT.
*2**	*7.0.037.0044*	*PAINEL FRONTAL ASTROLAB 2*	*FRONT PANEL ASTROLAB 2*	*MAQ. CAFE ASTROLAB 2 MB .24*	*1*
*48**	*4.0.000.0103-A*	*RACORD L G1/8-TUBO Ø4*	*"L" FITTING G1/8-TUBO Ø4*	*MAQ. CAFE ASTROLAB 2 MB .24*	*1*

restoran.eu

4 - 7.0.037.0134 -B- GRUPO CONJ. ASTROLAB MB

4 - GROUP ASSEMB. ASTROLAB MB

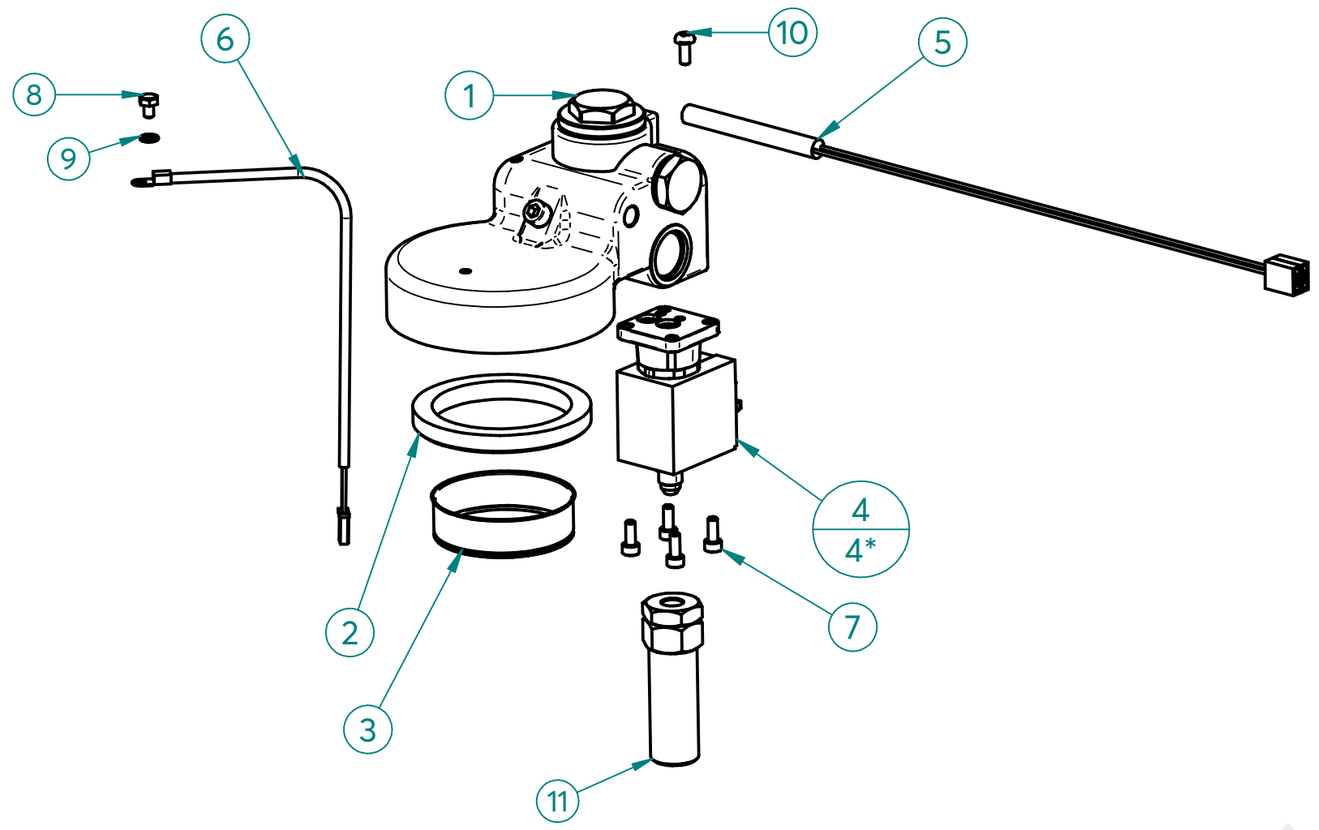

ITEM Nº	CÓDIGO	DESIGNAÇÃO	DESIGNATION	QUANT.
1	4.0.028.0000	GRUPO ECC-07 C/ RESIST.	ECC-07 GROUP W/ RESIST.	1
2	5.0.025.0012	JUNTA PORTA FILTRO 58X74X8,5MM (GR B-61/ECC-07)	FILTER HOLDER GASKET	1
3	5.0.025.0040	CRIVO GRUPO COMPETIÇAO	GROUP B-61 SIEVE	1
4	5.0.000.1130	ELECTROVALVULA 3 VIAS 230V C/ ORING - BASE LATAO	ELECTROVALVE 3 WAYS 230V W/ ORING - BRASS BASE	1
5	4.0.028.0060	RESISTENCIA CARTUCHO ø8 150W-230V	CARTRIDGE HEAT. ELEM. Ø8 150W 230V W/TERM.	1
6	4.0.000.0940	SONDA TEMPERATURA Ø4,25	TEMPERATURE PROBE Ø4,25	1
7	5.0.000.0575	PARAF. UMBRACO M4X10 INOX DIN912	M4X10 INOX DIN912 UMBRACO SCREW	4
8	4.2.000.9061	PARAFUSO CAB. SEXT. M4X6 NIQ. DIN933	M4X6 NIQ. DIN933 HEX HEAD SREW	1
9	4.2.000.9135	ANILHA RECART. M4 ZINC. DIN6798A	ZINC-PLATED TOOTHED WASHER M4 DIN6798A	1
10	4.2.000.9055	PARAFUSO CAB. PH M4X10 ZINC. DIN7985	ZINC-PLATED PHILLIPS HEAD SCREW M4X10	1
11	5.0.037.0020	RACORD DESCARGA GRUPO CONJ. CROM. L=70MM	ASS. GROUP DRAIN FITTING CROM. L=70MM	1

restoranu.eu

MODELO 208-240V/60HZ / *MODEL 208-240V/60HZ*

4 - 7.0.037.0133 -A- GRUPO CONJ. ASTROLAB MB 208-240V/60HZ

4 - GROUP ASSEMB. ASTROLAB MB 208-240V/60HZ

ITEM Nº	CÓDIGO	DESIGNAÇÃO	DESIGNATION	QUANT.
4*	5.0.000.0143	ELECTROVALVULA 3 VIAS 208-240V/60Hz (PARKER) - GRUPO	208-240V/60Hz 3 WAY ELECTROVALVE GROUP	1

1 - 4.0.028.0000 - GRUPO ECC-07 C/ RESIST.

1 - ECC-07 GROUP W/ RESIST.

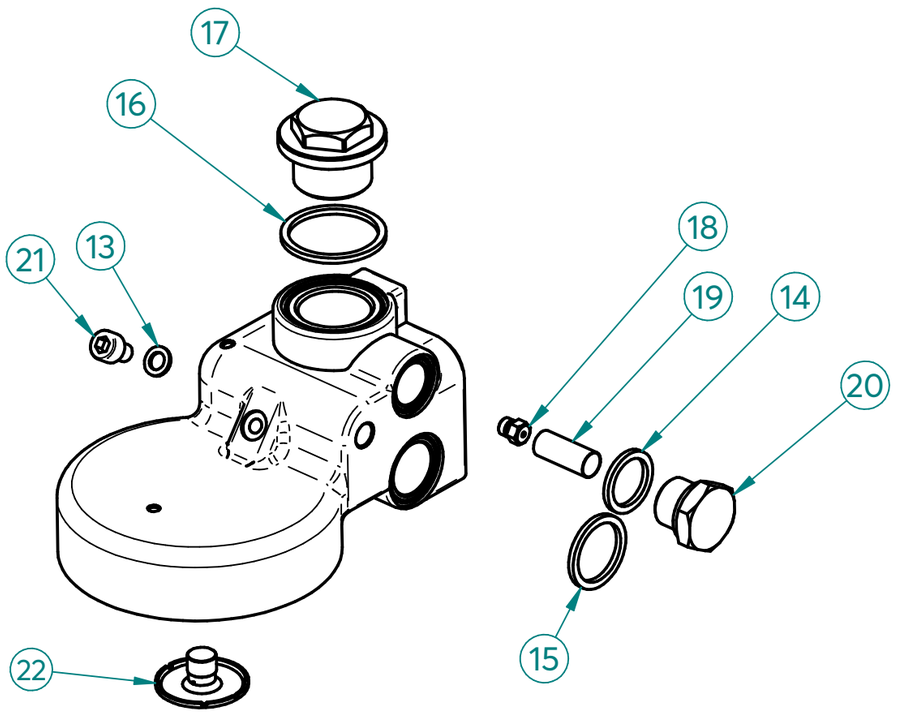

ITEM Nº	CÓDIGO	DESIGNAÇÃO	DESIGNATION	QUANT.
13	5.0.025.0015	JUNTA TEFLON 10X6X1	TEFLON GASKET	1
14	5.0.025.0022	JUNTA TEFLON 22X17X2	TEFLON GASKET	1
15	5.0.016.0106	JUNTA TEFLON 26X 21X2	TEFLON GASKET	1
16	5.0.025.0002	JUNTA TEFLON 35X30X2	TEFLON GASKET	1
17	5.0.016.0102	TAMPAO SUPERIOR M26X1,5 CROM. GR ECC-07	UPPER CHROM. COVER M26X1,5 (GR ECC-07)	1
18	5.0.016.0110	INJECTOR 0.7 M6X0,75 (GR ECC-07)	INJECTOR 0,7 M6X0,75 (GR ECC-07)	1
19	5.0.025.0023	FITRO INOX INJECTOR	GROUP GIGLEUR FILTER	1
20	5.0.025.0021	TAMPAO G3/8 CROM. (GR B-61/GR EC-07)	CHROM. COVER G3/8 (GR B-61/GR ECC-07)	1
21	5.0.025.0003	PARAFUSO UMBRACO M6X10 INOX (GR B-61/ECC-07)	FRONT INOX SCREW M6X10 OF THE GROUP B-61	1
22	5.0.025.0009	DISTRIBUIDOR GRUPO B-61/ECC-07	OUTLET GROUP B-61/ECC-07	1

6 - PM-CALDEIRA 10,5 LT MB C/ ACESSORIOS CONJ.

6 - 10,5 LT MB BOILER W/ ACESS. ASS.

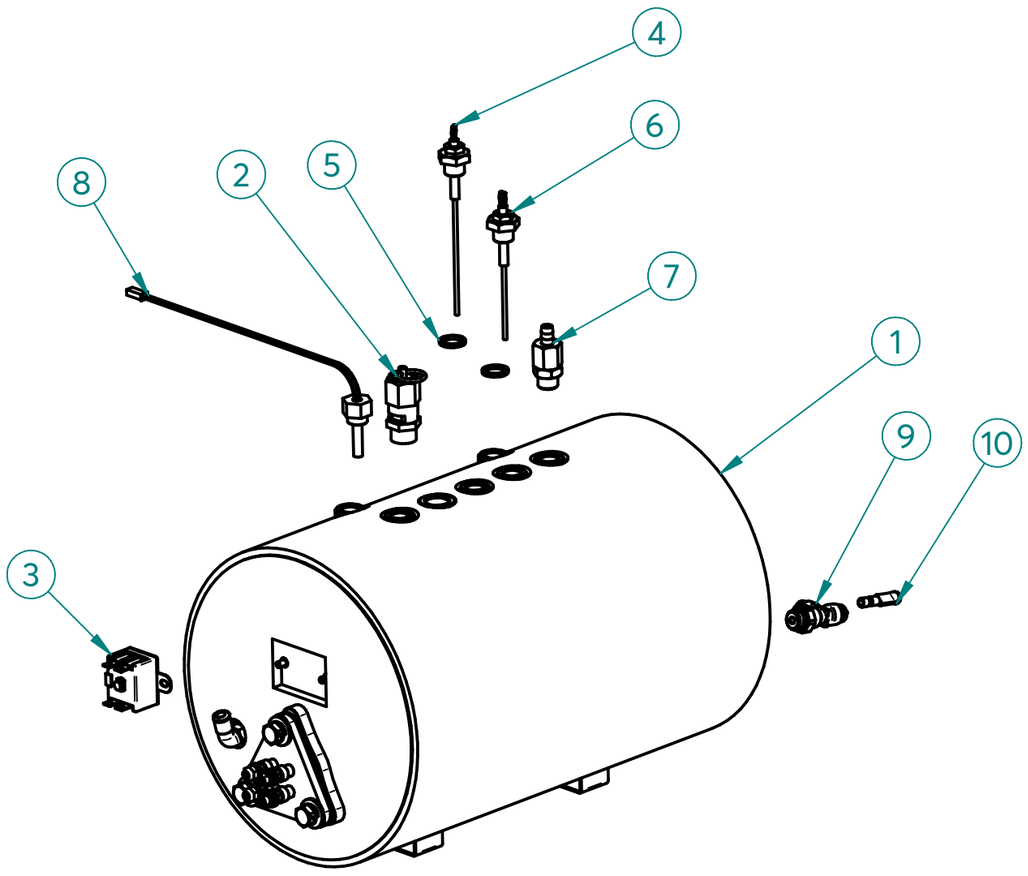

ITEM Nº	CÓDIGO	DESIGNAÇÃO	DESIGNATION	QUANT.
1	7.0.000.0557	CALDEIRA 10,5LT MB C/ PERM. E ACESS. TUB. COBRE	10,5LT MB BOILER W/ EXCHANGER W/ ACESS. COPPER TUBE	1
2	4.0.000.0051	VALVULA SEGURANÇA CALDEIRA	BOILER SECURITY VALVE	1
3	4.0.000.0250	TERMOSTATO SEGURANÇA 130°	SAFETY THERMOSTAT 130°	1
4	7.0.025.0002	SONDA ø2,5X135MM CONJ.	ø2,5X135MM PROBE ASS.	1
5	5.0.000.0315	JUNTA TEFLON 18X13,5X2MM	TEFLON GASKET	2
6	7.0.016.0070	SONDA ø2,5X105MM CONJ.	ø2,5X105MM PROBE ASS.	1
7	5.0.000.1002	VALVULA ANTI-VACUO	ANTI VACUUM VALVE	1
8	4.0.000.0941	SONDA TEMPERATURA G1/4-280MM	TEMPERATURE PROBE G1/4-280MM	1
9	4.0.000.0095	RACORD T LATERAL G1/4 TUBO ø6	T SIDE FITTING G1/4 - Ø6 PIPE	1
10	4.0.000.0093	TAMPAO TUBO ø6	TUBE COVER ø6	1

1 - 7.0.000.0557 - CALDEIRA 10,5LT MB C/ PREMUTADOR E ACESS.

1 - BOILER 10,5LT WITH EXCHANGER AND ACESS.

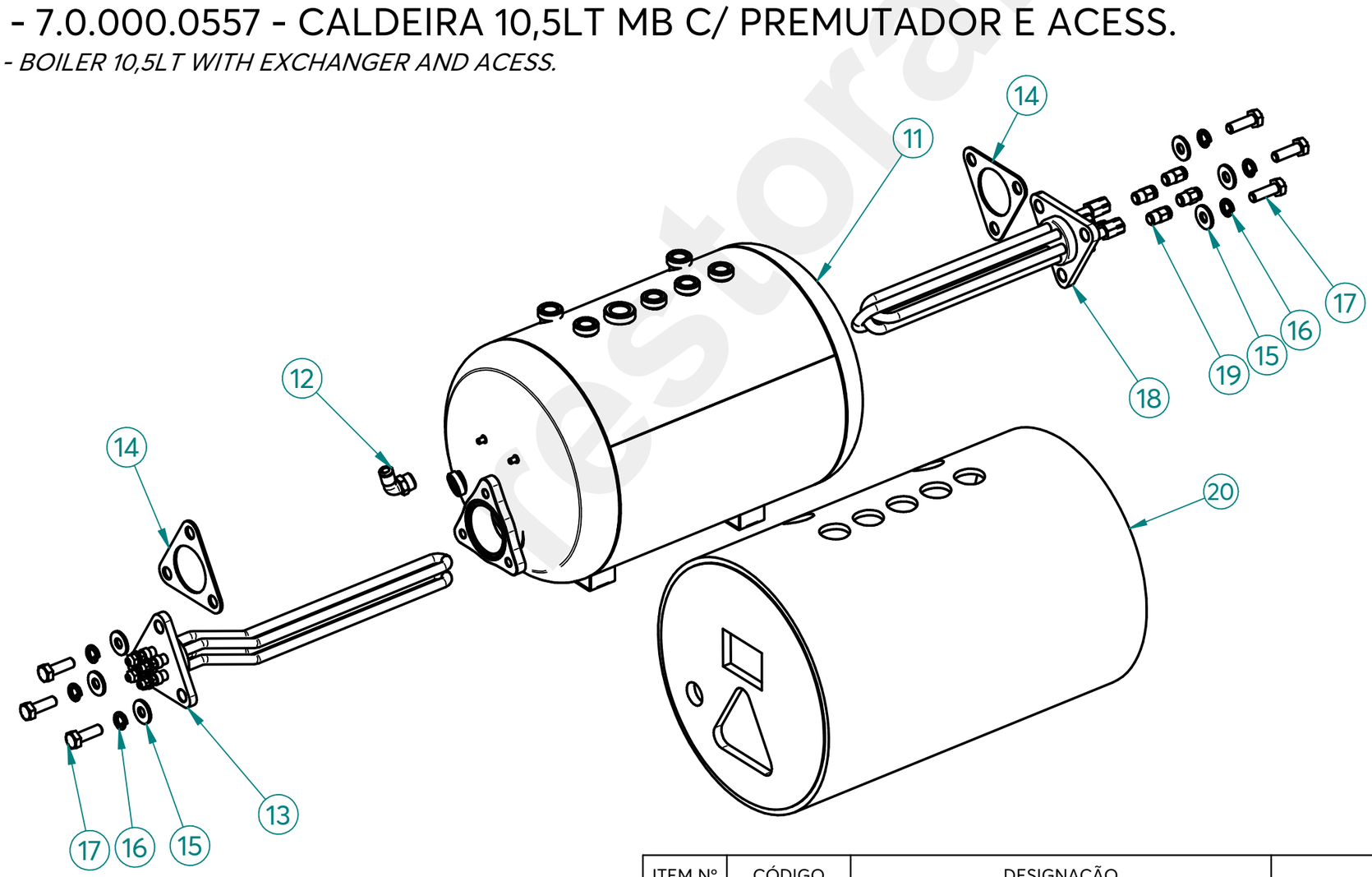

ITEM Nº	CÓDIGO	DESIGNAÇÃO	DESIGNATION	QUANT.
11	7.0.000.0551	CALDEIRA 10,5LT MB C/ PERMUTADOR	10,5LT MB BOILER WITH EXCHANGER	1
12	4.0.000.0109	RACORD L G1/4 TUBO TEFLON ø6	ø6 G1/4 TEFLON TUBE L RACORD	1
13	4.0.000.0221	RESISTENCIA FLANGE TRIANG. 3000W	TRIANGULAR HEATING ELEMENT (3000 W)	1
14	7.0.000.0010	JUNTA DA RESISTENCIA TRIANGULAR	TRIANGULAR HEAT. ELEMENT GASKET	2
15	7.2.000.0015	ANILHA PLANA 2X20X8,5 ZINC.	FLAT RING 2X20X8.5	6
16	4.2.000.9147	ANILHA MOLA M8 ZINC. DIN127B	M8 SPRING WASHER	6
17	4.2.000.9086	PARAFUSO CAB. SEXT. M8X25 ZINC. DIN933	ZINC-PLATED HEX. HEAD SCREW M8X25 DIN933	6
18	7.0.000.0582	PERMUTADOR C/ FLANGE TRIANGULAR	EXCHANGER W/TRIANG. FLANGE	1
19	4.0.000.0100	RACORD G1/8 TUBO TEFLON ø4	ø4 G1/8 TEFLON TUBE RACORD	4
20	4.0.000.0420	ISOLAMENTO CALDEIRA 10,5LT MB	BOILER INSULATION 10,5LT	1
21*				1

Management System ISO 9001:2015 TÜVRheinland CERTIFIED www.tuv.com ID 9108624282

www.fiamma.pt

This drawing may be altered without previous notice.
Os elementos deste desenho podem ser alterados sem aviso prévio.

9 - 7.0.037.0111 - CALDEIRA INOX 0,5LT 1500W CONJ. NV ASTROLAB

9 - 1500W 0,5L SS BOILER ASSEMB. ASTROLAB

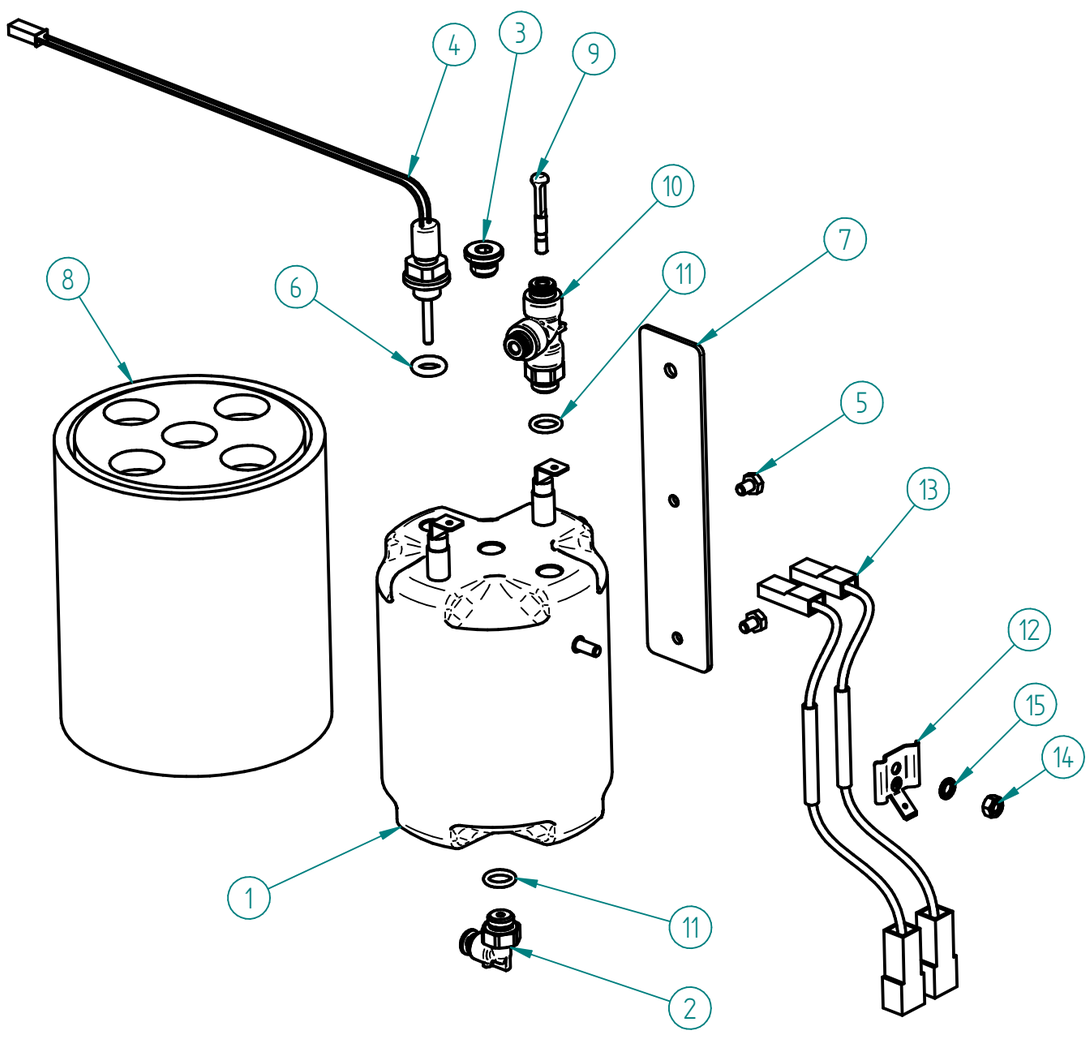

ITEM Nº	CÓDIGO	DESIGNAÇÃO	DESIGNATION	QUANT.
1	4.0.007.0027	CALDEIRA INOX 0,5LT 1500W S/ TERMOFUSIVEIS	SS BOILER 0,5LT 1500W WITHOUT THERMOFUSES	1
2	4.0.000.0103-A	RACORD L G1/8-TUBO Ø4	"L" FITTING G1/8-TUBO Ø4	1
3	4.0.000.0152	TAMPAO G1/8	G1/8 PLUG	1
4	4.0.000.0931	SONDA TEMPERATURA G1/8	TEMPERATURE PROBE G1/8	1
5	4.2.000.9061	PARAFUSO CAB. SEXT. M4X6 NIQ. DIN933	M4X6 NIQ. DIN933 HEX HEAD SREW	2
6	4.0.028.0068	ORING 7X3 VITON	ORING 7X3 VITON	1
7	7.0.037.0050	SUPORTE CALDEIRA CAFE ASTROLAB	COFFEE BOILER SUPPORT ASTROLAB	1
8	4.0.000.0425	ISOLAMENTO CALDEIRA CAFE 0,5LT	COFFEE BOILER INSULATION 0,5LT	1
9	4.0.000.0092	TAMPAO TUBO ø4	PUSH-IN PLUG TUBE Ø4	1
10	4.0.000.0094	RACORD T LATERAL G1/8 TUBO ø4	T SIDE FITTING G1/8 - Ø4 PIPE	1
11	4.0.000.0120	ORING 8X2 VITON	ORING 8X2 VITON	2
12	5.0.110.0038	SUPORTE TERMOFUSIVEL	THERMOFUSE SUPPORT	1
13	5.0.110.0037	TERMOFUSIVEL 128°C	128°C THERMOFUSE	2
14	4.2.000.9171	PORCA M4 ZINC. DIN934	M4 NUT ZINC. DIN934	1
15	4.2.000.9135	ANILHA RECART. M4 ZINC. DIN6798A	ZINC-PLATED TOOTHED WASHER M4 DIN6798A	1

12 - PM_CONTADOR VOLUMETRICO CONJ. COMPASS MB

12 - VOLUMETRIC COUNTER ASS. COMPASS MB

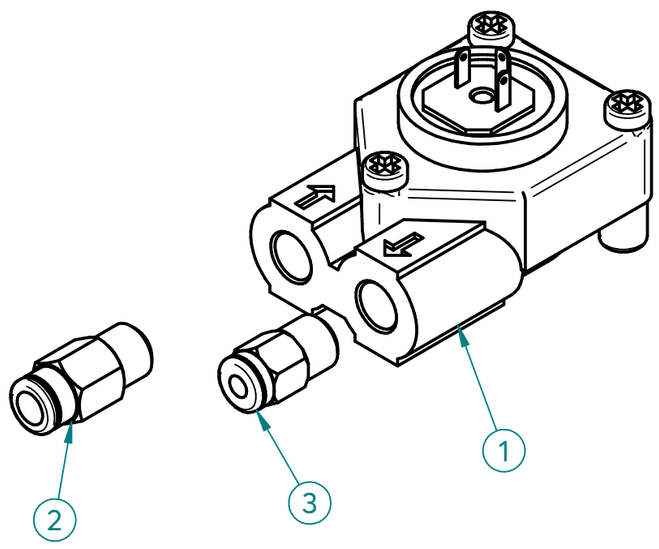

ITEM Nº	CÓDIGO	DESIGNAÇÃO	DESIGNATION	QUANT.
1	5.0.000.1012	CONTADOR VOLUMETRICO D1,15-G1/8 C/ LED	VOLUMETRIC DOSER D1,15-G1/8 W/ LED	1
2	4.0.000.0104	RACORD G1/8 TUBO TEFLON ø6	ø6 G1/8 TEFLON TUBE RACORD	1
3	4.0.000.0100	RACORD G1/8 TUBO TEFLON ø4	ø4 G1/8 TEFLON TUBE RACORD	1

restoranu.eu

Management System ISO 9001:2015 · TÜVRheinland CERTIFIED · www.tuv.com ID 9108624282

www.fiamma.pt

This drawing may be altered without previous notice.
Os elementos deste desenho podem ser alterados sem aviso prévio.

15 - 7.0.037.0105 - TORNEIRA AGUA CONJ. ASTROLAB

15 - WATER TAP ASSEMB. ASTROLAB

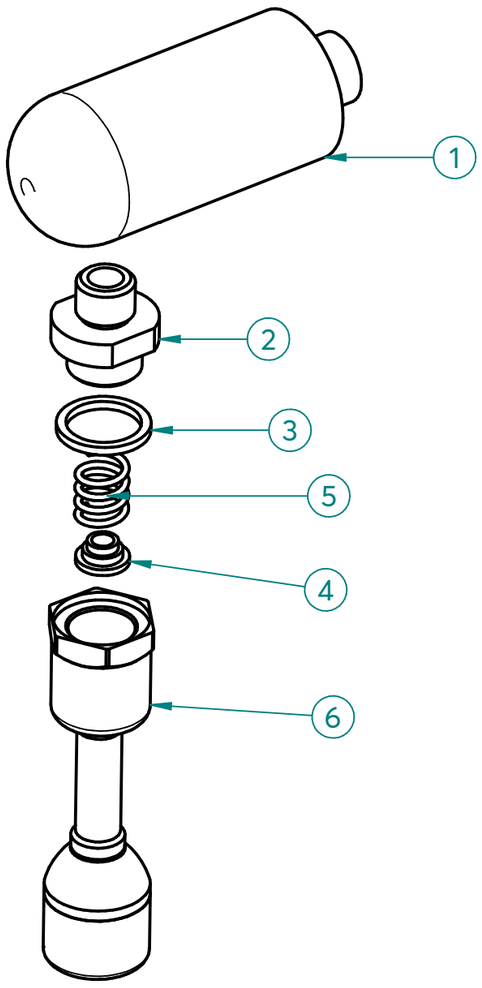

ITEM Nº	CÓDIGO	DESIGNAÇÃO	DESIGNATION	QUANT.
1	4.0.037.0079	RACORD EXTENSÃO TORNEIRA AGUA ASTROLAB	WATER TAP FITTING EXTENSION ASTROLAB	1
2	4.0.037.0078	RACORD SAIDA TORNEIRA AGUA ASTROLAB	WATER OUT FITTING ASTROLAB	1
3	5.0.025.1386	JUNTA TEFLON 21X16,8X2	TEFLON GASKET	1
4	5.0.025.6508	GUIA MOLA TUBO AGUA/VAPOR TORN. EVOL.	GUIDE BUSH	1
5	5.0.025.7060	MOLA TUBO AGUA/VAPOR TORN. EVOL.	SPRING TAP	1
6	5.0.037.0330	TUBO TORNEIRA AGUA INOX ASTROLAB (CONJ.)	WATER TAP PIPE ASSEMB. ASTROLAB	1

17 - 7.0.037.0126 - ELECTROVALVULA MISTURADORA CONJ. ASTROLAB

17 - MIX SOLENOID VALVE ASSEMB. ASTROLAB

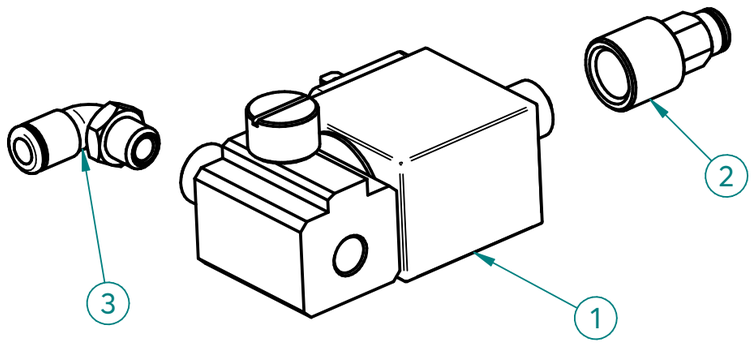

ITEM Nº	CÓDIGO	DESIGNAÇÃO	DESIGNATION	QUANT.
1	4.0.028.0017	ELECTROVALVULA 3 VIAS 230V MISTURADORA	3 WAY 230V SOLENOID MIXER	1
2	4.0.000.0107-A	RACORD G1/4F TUBO TEFLON ø6	ø6 G1/4F TEFLON TUBE RACORD	1
3	4.0.000.0108	RACORD L G1/8 TUBO TEFLON ø6	ø6 G1/8 TEFLON TUBE L RACORD	1

Management System ISO 9001:2015
TÜVRheinland CERTIFIED
www.tuv.com ID 9108624282

www.fiamma.pt

This drawing may be altered without previous notice.
Os elementos deste desenho podem ser alterados sem aviso prévio.

25 - 7.0.037.0122 - CAIXA LIGADOR/CONTACTOR CONJ. ASTROLAB

25 - MAIN SWITCH/CONTACTOR ASTROLAB

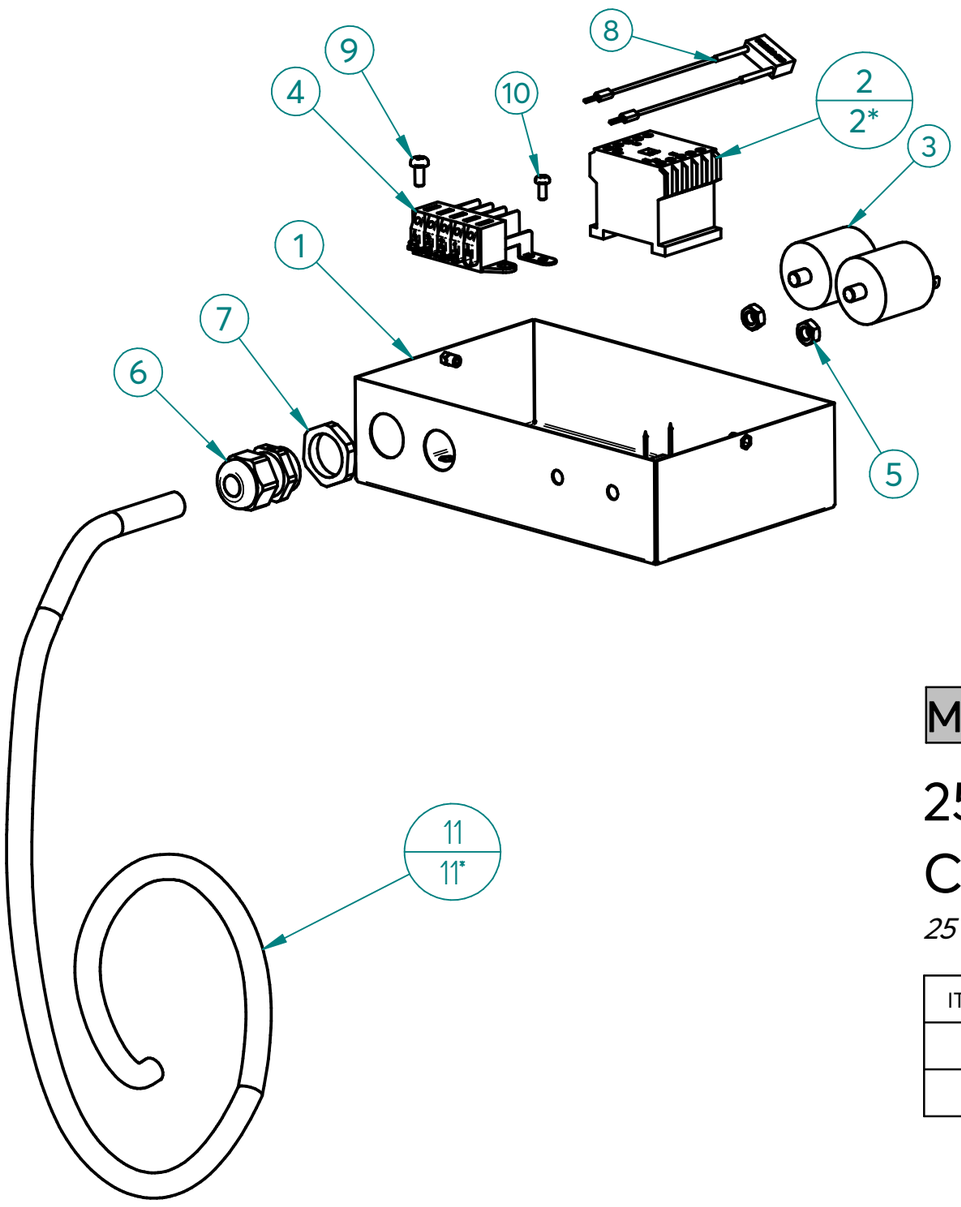

ITEM Nº	CÓDIGO	DESIGNAÇÃO	DESIGNATION	QUANT.
1	7.0.037.0015	CAIXA INTERRUPTOR GERAL ASTROLAB	MAIN SWITCH BOX ASTROLAB	1
2	4.0.091.0003	CONTACTOR 22A-AC1 BOBINE 230V	CONTACTOR 22A-AC1 230V	1
3	4.0.000.0997	FILTRO EMC MAQ. CAFE	EMC FILTER COFFEE MACHINE	2
4	4.0.028.0015	LIGADOR RAPIDO 5 POLOS	FAST LINKER	1
5	4.2.000.9174	PORCA M8 ZINC. DIN934	M8 NUT ZINC. DIN934	2
6	4.0.037.0060	CERRA CABOS P/ FURO Ø25,2	CABLE CLAMP (Ø25,2 HOLE)	1
7	4.0.037.0062	PORCA CERRA CABOS P/ FURO Ø25,2	CABLE CLAMP NUT (Ø25,2 HOLE)	1
8	4.0.000.0998	FILTRO RC MAQ. CAFE	COFFEE MACHINE RC FILTER	1
9	4.2.000.9121	PARAFUSO CAB. PH M5X12 ZINC. DIN7985	M5X12 ZINC. PH HEAD SREW DIN 7985	1
10	4.2.000.9055	PARAFUSO CAB. PH M4X10 ZINC. DIN7985	ZINC-PLATED PHILLIPS HEAD SCREW M4X10	1
11	4.0.028.0058	CABO H07RN-F 5G4	H07RN-F 5G4 CABLE	1

MODELO 208-240V/60HZ / *MODEL 208-240V/60HZ*

25 - 7.0.037.0121 - CAIXA LIGADOR/CONTACTOR CONJ. (EUA) ASTROLAB

25 - MAIN SWITCH/CONTACTOR (USA) ASTROLAB

ITEM Nº	CÓDIGO	DESIGNAÇÃO	DESIGNATION	QUANT.
2*	4.0.091.0001	CONTACTOR 22A-AC1 BOBINE 208V	CONTACTOR 22A-AC1 COIL 208V	1
11*	4.2.000.9474	CABO SO-SOW 10AWGX3C 600V 90°	CABLE SO-SOW 10AWGX3C 600V 90°	1

34 - PM -TORNEIRA MEIA VOLTA VAPOR CONJ. ASTROLAB

34 - COOL TOUCH TAP ASSEMB. ASTROLAB

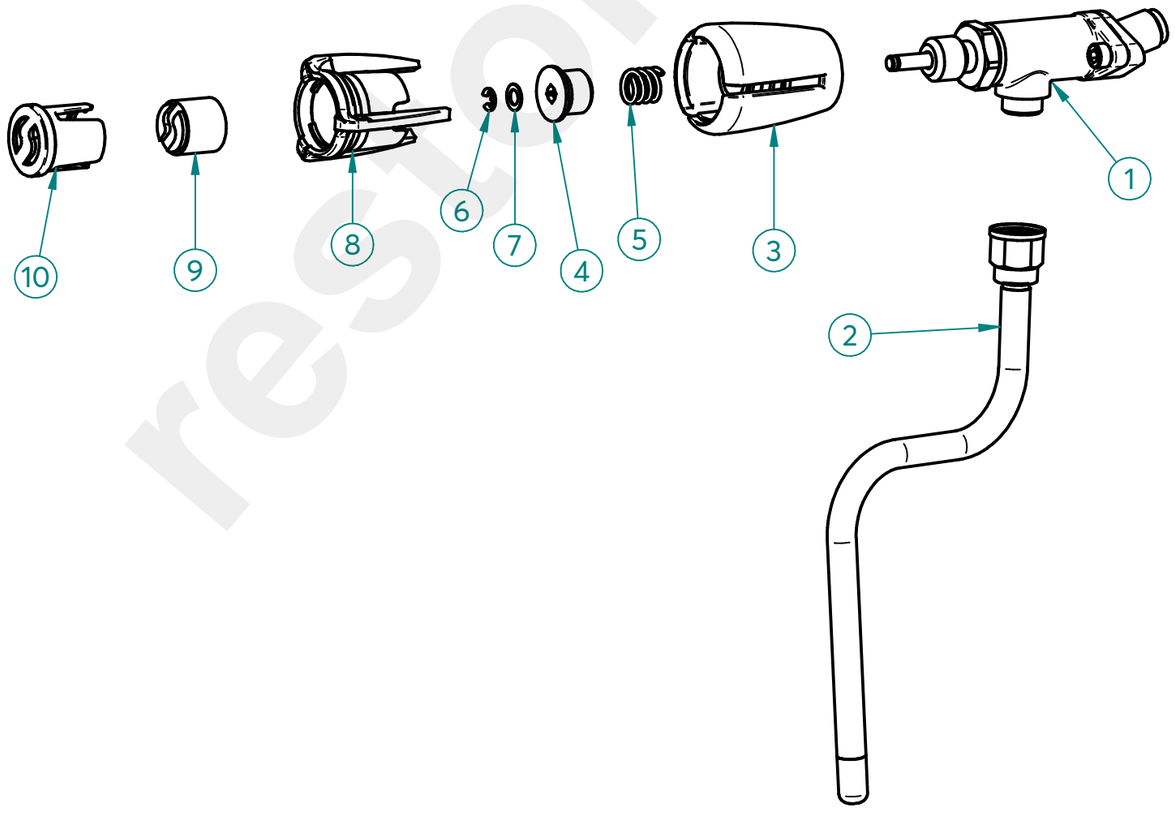

ITEM Nº	CÓDIGO	DESIGNAÇÃO	DESIGNATION	QUANT.
1	4.0.037.0161	TORNEIRA MEIA VOLTA G3/8-G3/8 CROM. S/ ACESS. RST	TAP G3/8-G3/8 CROM. WITHOUT ACESS. RST	1
2	5.0.028.0340	TUBO TORNEIRA VAPOR COOL TOUCH (CONJ.)	COOL TOUCH STEAM TAP TUBE	1
3	4.0.007.0126	CORPO MANIPULO TORN. MEIA VOLTA ECC-23 RST	BODY TAP KNOB RST	1
4	5.0.007.0011	RACORD ADAPT. TR18X8 2P TORN. MEIA VOLTA RST	RACORD ADAPT. TAP RST	1
5	5.0.016.0214	MOLA RACORD ADAPT. TORN. MEIA VOLTA RST	SPRING-K TAP	1
6	4.0.037.0164	FREIO SEGURANÇA 4MM INOX	SAFETY BRAKE 4MM STAINLESS STEEL	1
7	4.0.037.0165	ANILHA PLANA 11X6,5X0,5MM LATAO TORN. MEIA VOLTA RST	BRASS PLAIN WASHER 11X6,5X0,5MM	1
8	4.0.007.0127	ANEL CROMADO MAN. TORN. RST	CHROME RING TAP KNOB RST	1
9	4.0.007.0135	SIMBOLO FIAMMA BRANCO MAN. TORN. RST	WHITE SYMBOL FIAMMA TAP KNOB RST	1
10	4.0.007.0131	TAMPAO MAN. TORN. RST	FILTER HOLDER HANDLE TAP	1

Management System ISO 9001:2015 TÜVRheinland CERTIFIED www.tuv.com ID 9108624282

www.fiamma.pt

This drawing may be altered without previous notice.
Os elementos deste desenho podem ser alterados sem aviso prévio.

1 - 4.0.037.0161- TORNEIRA MEIA VOLTA G3/8-G3/8 CROM. S/ ACESS. RST

1 - TAP G3/8-G3/8 CROM. WITHOUT ACESS. RST

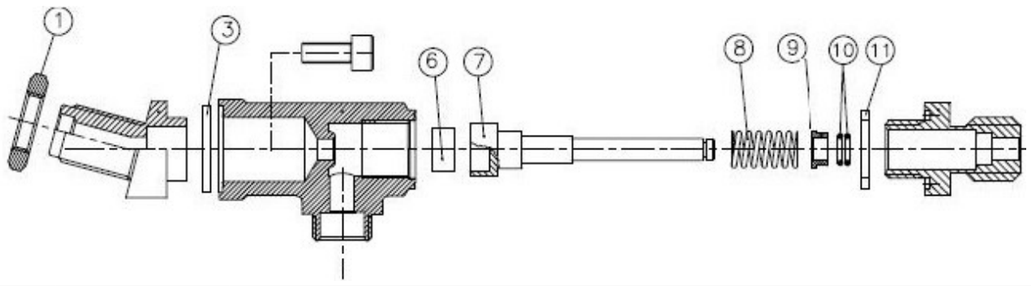

ITEM Nº	CÓDIGO	DESIGNAÇÃO	DESIGNATION	QUANT.
1	4.0.037.0166	PORCA G3/8 LATAO (SEXT. 24MM) TORN. CROM. RST	BRASS NUT G3/8 (HEX. 24MM)	1
3	5.0.037.0302	JUNTA TEFLON 24X18X2 TORN. ALAVANCA CROM.	TEFLON GASKET 24X18X2MM LEVER TAP CROM.	1
6	5.0.016.0301	JUNTA BORRACHA TORN. ECC-07	ECC-07 TAP RUBBER GASKET	1
7	5.0.037.0338	VEIO TORNEIRA MEIA VOLTA CROM.	TAP SPINDLE CROM.	1
8	5.0.016.0302	MOLA VEIO TORN. ECC-07	ECC-07 TAP SPINDLE SPRING	1
9	5.0.016.0305	CASQUILHO VEIO TORN. ECC-07	ECC-07 TAP SHAFT BUSHING	1
10	5.0.016.0306	ORING VEIO TORN. ECC-07	ECC-07 TAP SPINDLE ORING	2
11	5.0.016.0303	JUNTA COBRE 22X17X2 TORN. ECC-07	ECC-07 TAP COPPER GASKET 22X17X2	1

OPCIONAL/OPTIONAL

34 - PM - TORNEIRA VAPOR CONJ. ASTROLAB

34 - COOL TOUCH TAP ASSEMB. ASTROLAB

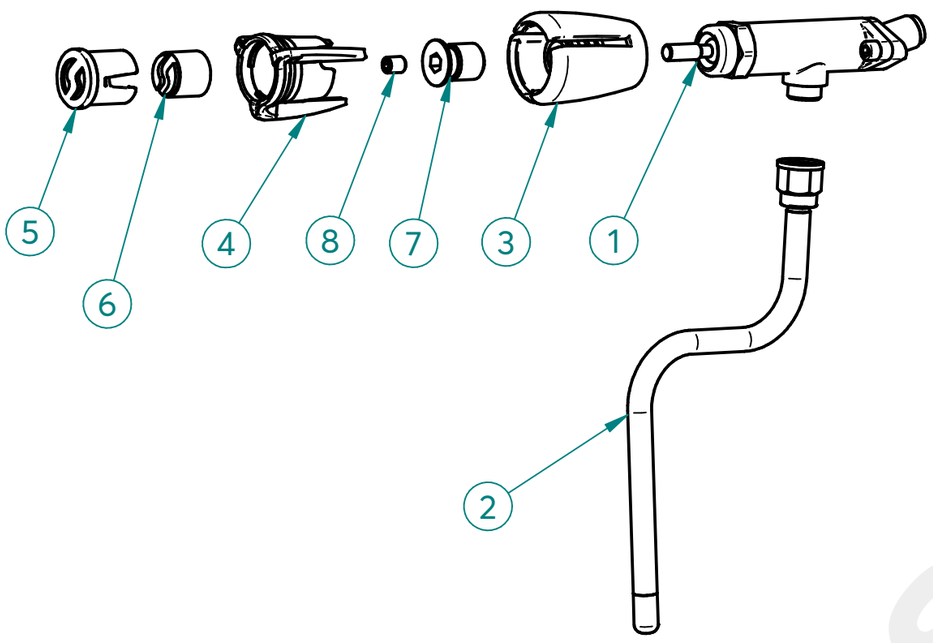

ITEM Nº	CÓDIGO	DESIGNAÇÃO	DESIGNATION	QUANT.
1	5.0.037.0010	TORNEIRA ALAVANCA G1/4-G3/8 CROM. RST	LEVER TAP G1/4-G3/8 CROM. RST	1
2	5.0.028.0340	TUBO TORNEIRA VAPOR COOL TOUCH (CONJ.)	COOL TOUCH STEAM TAP TUBE	1
3	4.0.007.0125	CORPO MANIPULO TORN. RST	BODY TAP KNOB RST	1
4	4.0.007.0127	ANEL CROMADO MAN. TORN. RST	CHROME RING TAP KNOB RST	1
5	4.0.007.0131	TAMPAO MAN. TORN. RST	FILTER HOLDER HANDLE TAP	1
6	4.0.007.0135	SIMBOLO FIAMMA BRANCO MAN. TORN. RST	WHITE SYMBOL FIAMMA TAP KNOB RST	1
7	5.0.007.0011	RACORD ADAPT. TR18X4A2P-M8F TORN. ALAVANCA RST	RACORD ADAPT. LEVER TAP RST	1
8	5.0.007.0012	PARAFUSO SEM CAB. UMBR. M8X10 ZINC. DIN916	ZINC-PLATED SOCKET SET SCREW M8X10 DIN916	1

1 - 5.0.037.0010- TORNEIRA ALAVANCA G1/4-G3/8 CROM. RST

1 - LEVER TAP G1/4-G3/8 CROM. RST

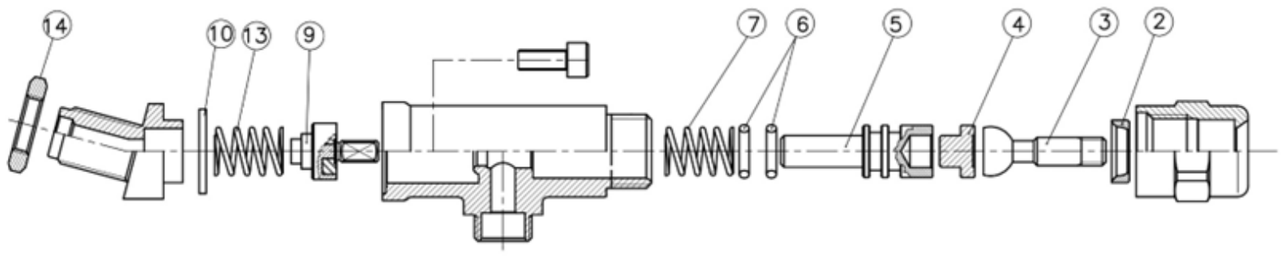

ITEM Nº	CÓDIGO	DESIGNAÇÃO	DESIGNATION	QUANT.
2	5.0.007.0309	INSERTO AÇO NITRO. TORN ALAVANCA	STEEL INSERT LEVER TAP	1
3	5.0.007.0308	VEIO FRONTAL AÇO NITRO. C/ ESFERA TORN. ALAVANCA	FRONT SHAFT LEVER TAP	1
4	5.0.007.0307	CASQUILHO AÇO NITRO. TORN. ALAVANCA	METAL SLEEVE LEVER TAP	1
5	5.0.037.0305	VEIO POSTERIOR PORTA ORINGS TORN. ALAVANCA CROM.	REAR SHAFT LEVER TAP CROM.	1
6	5.0.007.0306	ORING VEIO POST. TORN. ALAVANCA	SHAFT ORING LEVER TAP	2
7	5.0.007.0304	MOLA VEIO TORN. ALAVANCA	SHAFT SPRING LEVER TAP	1
9	5.0.007.0301	VALVULA ANTI-RETORNO TORN. ALAVANCA	ANTI-BACKFLOW VALVE LEVER TAP	1
10	5.0.037.0302	JUNTA TEFLON 24X18X2 TORN. ALAVANCA CROM.	TEFLON GASKET 24X18X2MM LEVER TAP CROM.	1
13	5.0.037.0313	MOLA VALVULA ANTI-RETORNO TORN. ALAVANCA CROM.	ANTI-BACKFLOW SPRING LEVER TAP CROM.	1
14	4.0.000.0045	PORCA G3/8 LATAO (SEXT. 21MM)	BRASS NUT G3/8 (HEX. 21MM)	1

Management System ISO 9001:2015 TÜVRheinland CERTIFIED www.tuv.com ID 9108624282

www.fiamma.pt

This drawing may be altered without previous notice.
Os elementos deste desenho podem ser alterados sem aviso prévio.

MB „Restoranų įranga“ · Vito Gerulaičio 1-59, LT-08200 Vilnius · +370 614 89888 · info@restoranu.eu · www.restoranu.eu

MÁQ. CAFÉ ASTROLAB 2 MB. 24

ESPRESSO COFFEE MACHINE ASTROLAB 2 MB .24

R01

41 - 7.0.037.0114 - RELES / ELECTROV. ENTRADA AGUA CONJ. ASTROLAB 2

41 - RELAYS/ELECTROV. WATER INLET ASSEMB. ASTROLAB 2

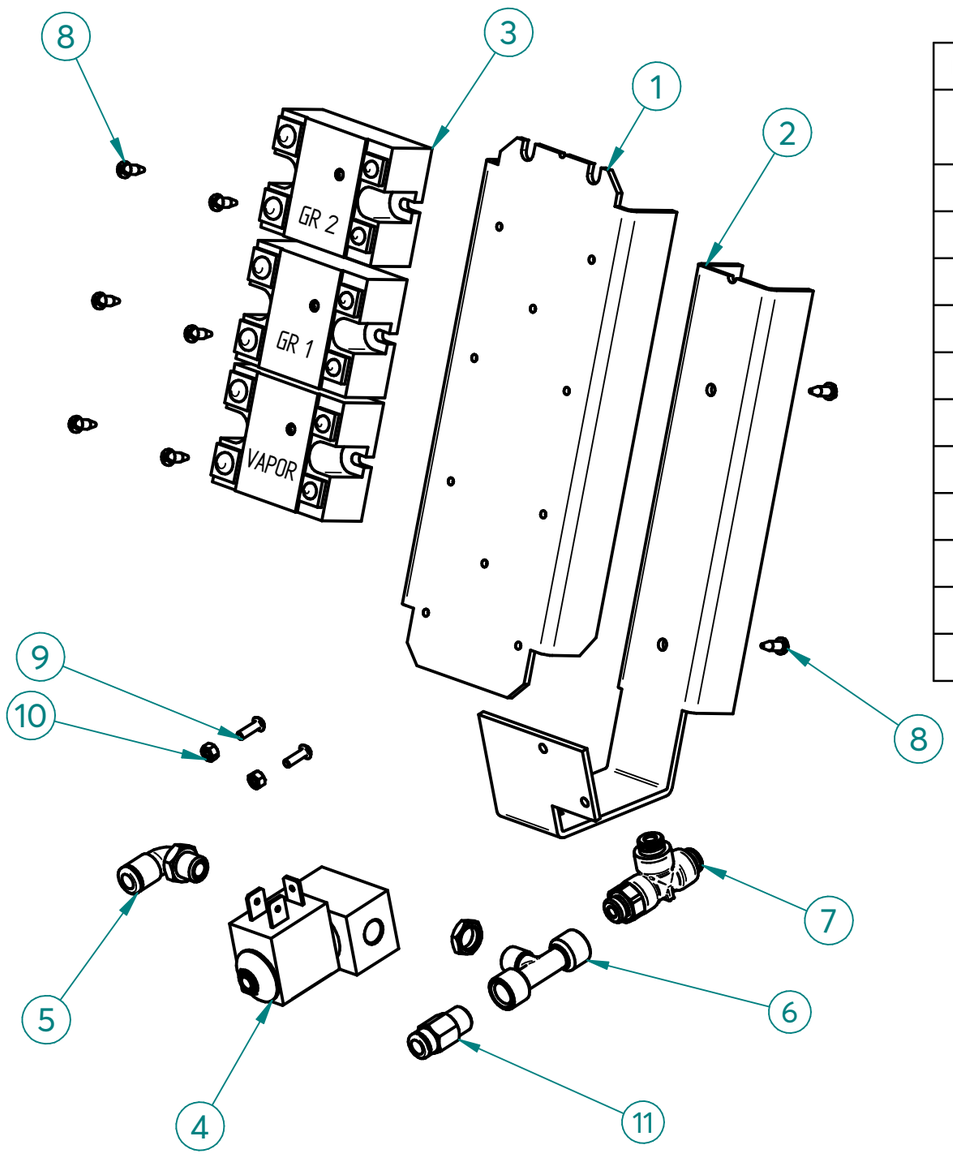

ITEM Nº	CÓDIGO	DESIGNAÇÃO	DESIGNATION	QUANT.
1	7.0.037.0060	SUPORTE RELÉS - ELECTROV. ENTRADA AGUA ASTROLAB	WATER INLET SUPPORT ASTOLAB	1
2	7.0.037.0062	DISSIPADOR RELÉS ASTROLAB	RELAYS SINK ASTROLAB	1
3	4.0.000.0991	RELE ESTATICO 25A	25A SOLID STATE RELAY	3
4	4.0.037.0104	ELECTROVALVULA 2 VIAS 230V INOX - G1/8F Ø1,9	2-WAY SOL.VALVE 230V INOX - G1/8F Ø1,9	1
5	4.0.000.0108	RACORD L G1/8 TUBO TEFLON ø6	ø6 G1/8 TEFLON TUBE L RACORD	1
6	5.0.000.0740	RACORD T G1/8F-G1/8F-G1/8	RACORD L G1/8-G1/8F	1
7	4.0.000.0094	RACORD T LATERAL G1/8 TUBO ø4	T SIDE FITTING G1/8 - Ø4 PIPE	1
8	4.2.000.9103	PARAFUSO ROSCA CHAPA B3,5X9,5 NIQ. DIN7981	SCREW B3,5X9,5	8
9	4.2.000.9618	PARAFUSO CAB. OVAL UMBR. M3X10 INOX	SCREW M3x10	2
10	4.2.000.9170	PORCA M3 ZINC. DIN934	M3 NUT ZINC. DIN934	2
11	4.0.000.0104	RACORD G1/8 TUBO TEFLON ø6	ø6 G1/8 TEFLON TUBE RACORD	1
12*	4.0.000.0046	PORCA G1/8 LATAO NIQ.	BRASS NUT G1/8	1

59 - PM_MOTOR CONJ. ASTROLAB MB

59 - MOTOR ASS. ASTROLAB MB

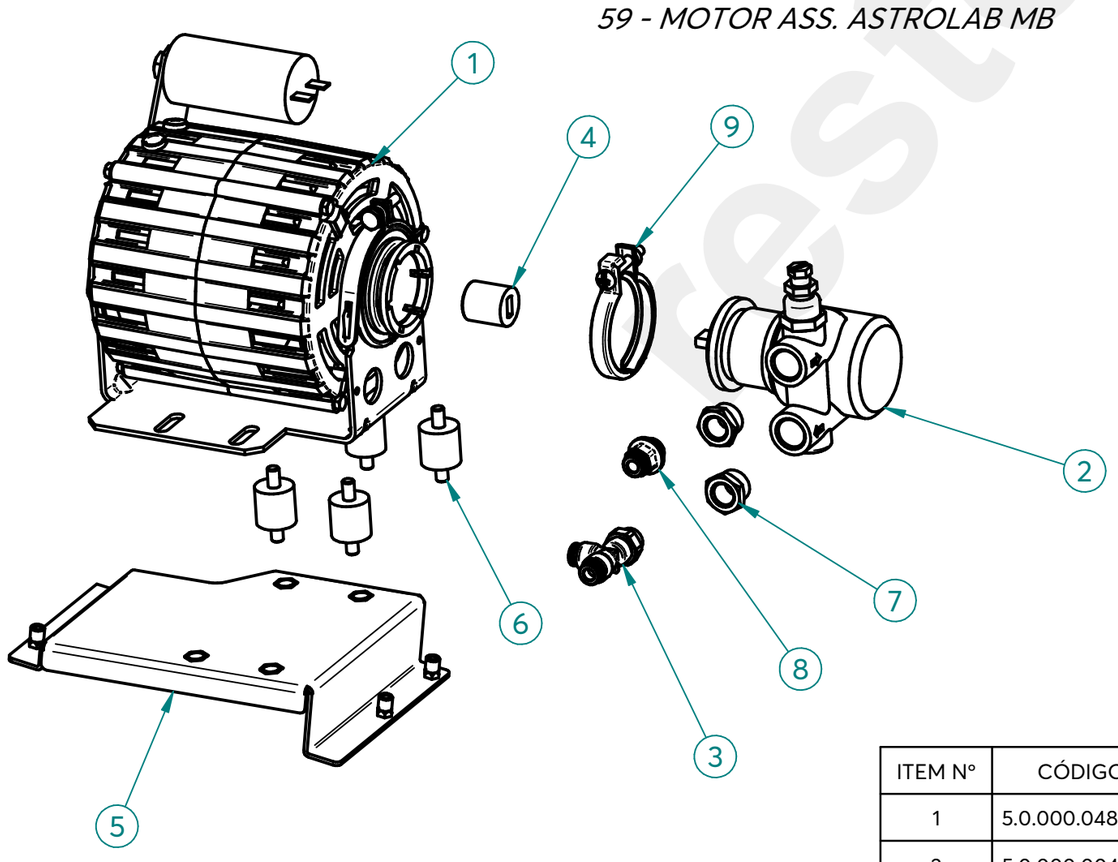

ITEM Nº	CÓDIGO	DESIGNAÇÃO	DESIGNATION	QUANT.
1	5.0.000.0485	MOTOR GR. P/ ACOPLAMENTO	MOTOR TO COUPLING	1
2	5.0.000.0040	BOMBA AGUA	WATER PUMP	1
3	4.0.000.0095	RACORD T LATERAL G1/4 TUBO ø6	T SIDE FITTING G1/4 - Ø6 PIPE	1
4	5.0.000.0474	ACOPLAMENTO MOTOR/BOMBA	MOTOR/PUMP COUPLING	1
5	7.0.037.0065-A	APOIO MOTOR ASTROLAB MB	MOTOR SUPPORT ASTROLAB MB	1
6	4.0.000.0032	APOIO MOTOR	MOTOR SUPPORT	4
7	4.0.000.0118	RACORD G3/8-G1/4F NIQ.	G3/8-G1/4F NICKEL RACORD	2
8	4.0.000.0099	RACORD G1/4 TUBO ø6	FITTING G1/4 - Ø6 PIPE	1

Restoranu.eu

79 - PM-PAINEL LATERAL ESQ. CONJ. ASTROLAB

79 - LEFT SIDE PANEL ASSEMB. ASTROLAB

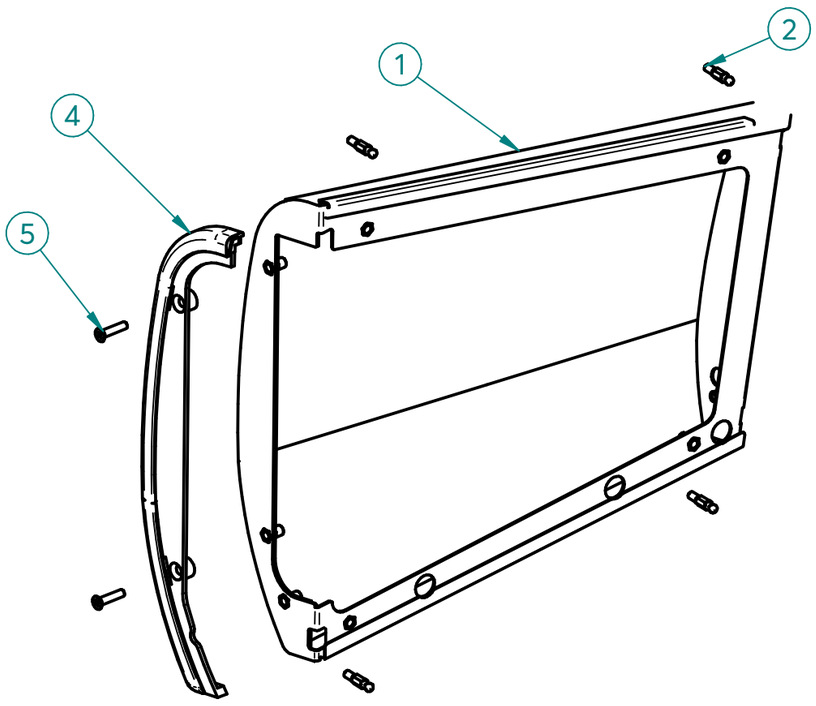

ITEM Nº	CÓDIGO	DESIGNAÇÃO	DESIGNATION	QUANT.
1	4.0.037.0086	PAINEL LATERAL ESQ. ASTROLAB	LEFT SIDE PANEL ASTROLAB	1
2	4.0.025.0090	PERNO FIXACÇAO PAINEL LAT.	FIXER PIN	4
4	4.0.037.0027	LATERAL FRONTAL ESQ. ASTROLAB	LEFT FRONT SIDE ASTROLAB	1
5	4.2.000.9134	PARAFUSO CAB. EMB. PH M5X20 INOX DIN965	SCREW M5X20	2

80 - PM-PAINEL LATERAL DIR. CONJ. ASTROLAB

81 - RIGHT SIDE PANEL ASSEMB. ASTROLAB

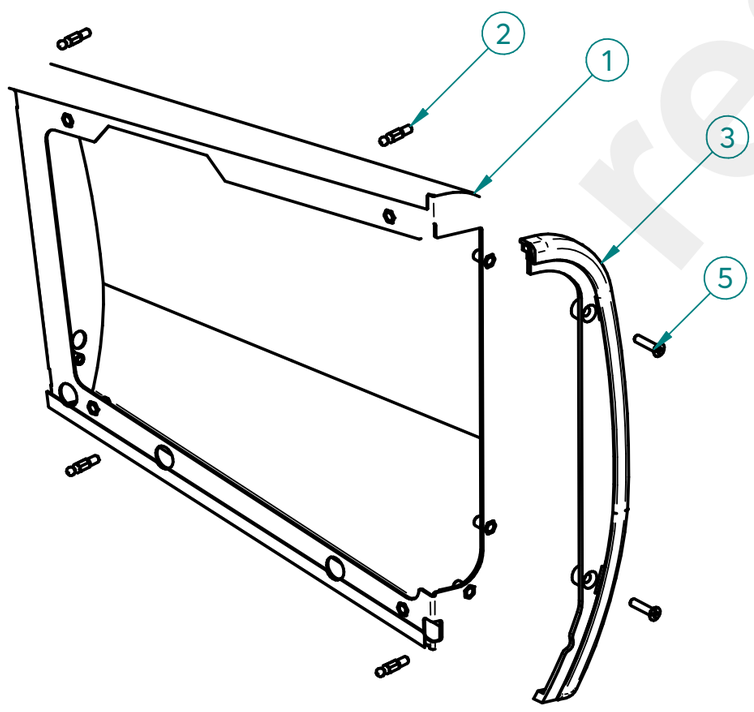

ITEM Nº	CÓDIGO	DESIGNAÇÃO	DESIGNATION	QUANT.
1	4.0.037.0084	PAINEL LATERAL DIR. ASTROLAB	RIGTH SIDE PANEL ASTROLAB	1
2	4.0.025.0090	PERNO FIXACÇAO PAINEL LAT.	FIXER PIN	4
3	4.0.037.0026	LATERAL FRONTAL DIR. ASTROLAB	RIGTH FRONT SIDE ASTROLAB	1
5	4.2.000.9134	PARAFUSO CAB. EMB. PH M5X20 INOX DIN965	SCREW M5X20	2

restoranu.eu

81 - PM-PAINEL POSTERIOR CONJ. ASTROLAB 2 V24

81 - ASTROLAB 2 V24 BACK PANEL ASSEMB.

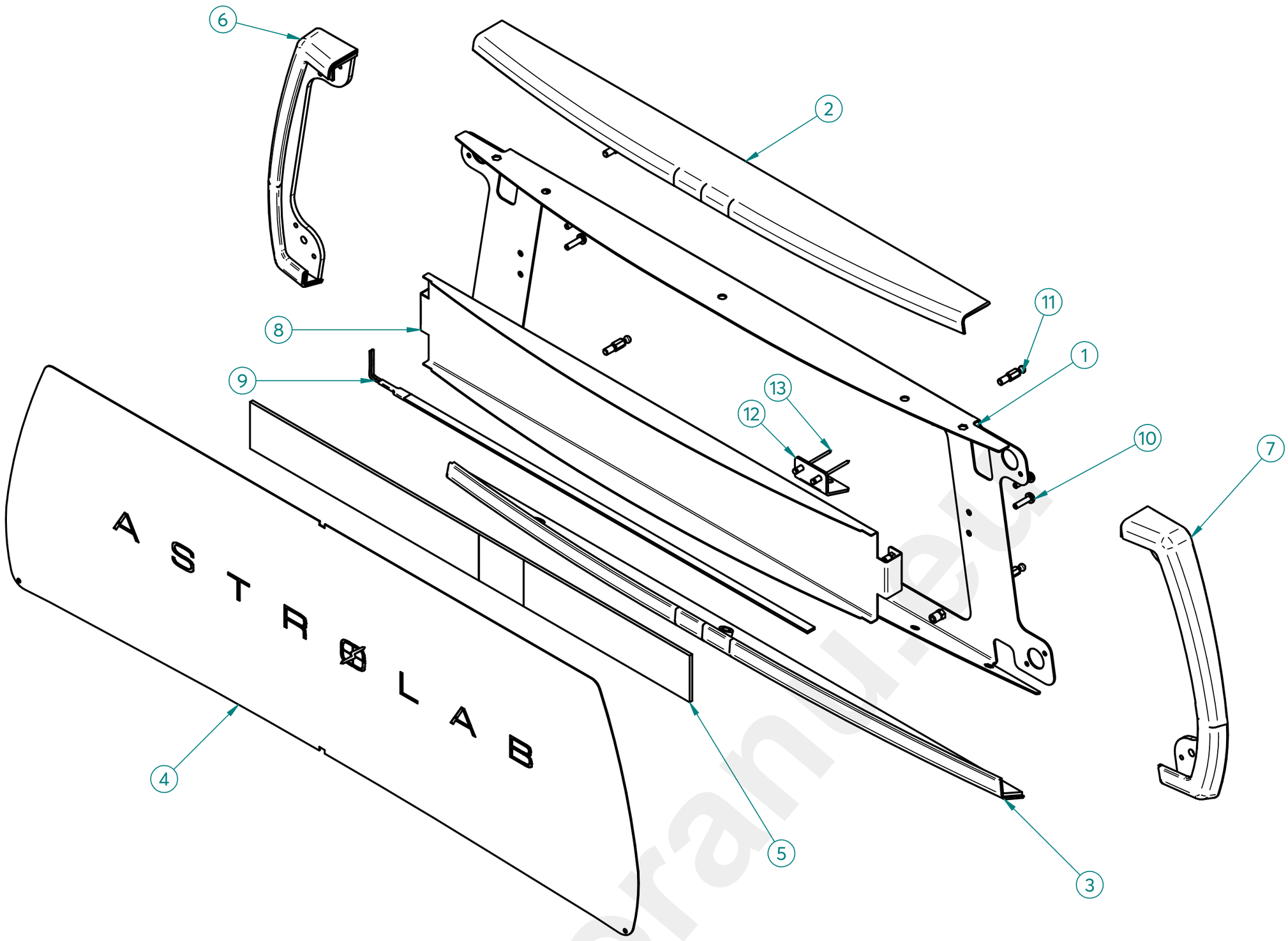

ITEM Nº	CÓDIGO	DESIGNAÇÃO	DESIGNATION	QUANT.
1	7.0.037.2197	REFORÇO PAINEL POST. ASTROLAB 2 V24	REAR PANEL REINFORCEMENT ASTROLAB 2	1
2	4.0.037.0017-A	POSTERIOR SUPERIOR ASTROLAB 2	REAR UPPER ASTROLAB 2	1
3	4.0.037.0014-A	POSTERIOR INFERIOR ASTROLAB 2	REAR INFERIOR ASTROLAB 2	1
4	7.0.037.2034	PAINEL POSTERIOR ASTROLAB 2 V24	REAR PANEL ASTROLAB 2	1
5	4.0.037.2225	ACRILICO PAINEL POST RETRO ILUMINADO ASTROLAB	ACRYLIC POSTERIOR BACKLIT ASTROLAB	1
6	4.0.037.0020-A	LATERAL POSTERIOR DIR. ASTROLAB	REAR RIGTH PANEL ASTROLAB	1
7	4.0.037.0023-A	LATERAL POSTERIOR ESQ. ASTROLAB	REAR LEFT PANEL ASTROLAB	1
8	7.0.037.2220CL5	SUPORTE LEDS PAINEL POST. ASTROLAB 2 WHITE-RAL 9003 MAT	POSTERIOR LED SUPPORT PANEL ASTROLAB 2 WHITE-RAL 9003 MAT	1
9	4.0.046.1025	TIRA LED BRANCO 8MM 6000K-24V 450MM C/ CABO	WHITE LED STRIP 8MM 6000K-24V 450MM W/ CABLE	1
10	4.2.000.9122	PARAFUSO CAB. PH M4X16 ZINC. DIN7985	M4X16 ZINC. DIN7985 PH HEAD SREW	4
11	4.0.025.0090	PERNO FIXACÇAO PAINEL LAT.	FIXER PIN	4
12	7.0.037.0037	FIXADOR PAINEL POST ASTROLAB	REAR PANEL FIXER ASTROLAB	1
13	4.2.000.9205	REBITE ALUMINIO 4X8	ALUMINIUM REVIT 4X8	2

Management System ISO 9001:2015
TÜVRheinland CERTIFIED
www.tuv.com ID 9108624282

www.fiamma.pt

This drawing may be altered without previous notice.
Os elementos deste desenho podem ser alterados sem aviso prévio.

MÁQ. CAFÉ ASTROLAB 2 MB. 24

ESPRESSO COFFEE MACHINE ASTROLAB 2 MB .24

R01

83 - PM - TABULEIRO SUPERIOR CONJ. ASTROLAB 2

83 - UPPER TRAY ASSEMB. ASTROLAB 2

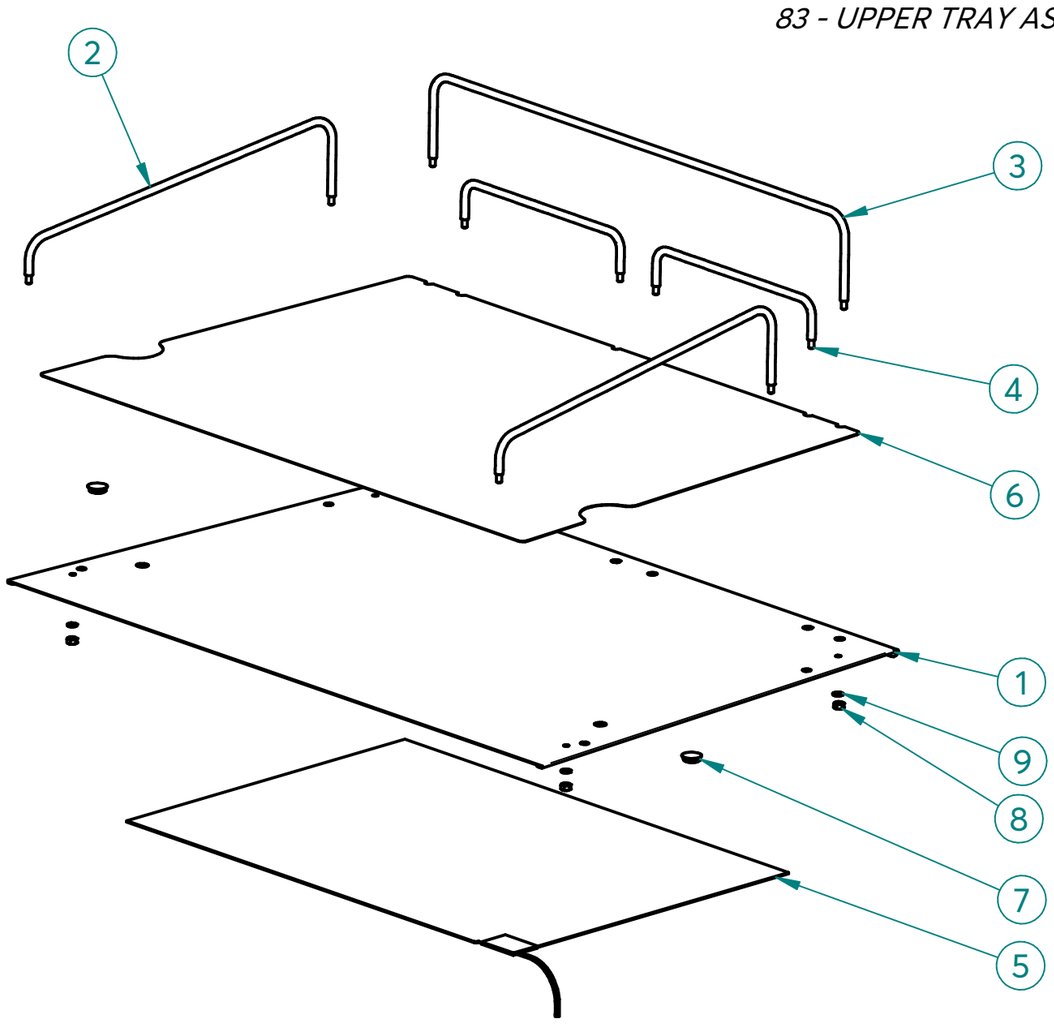

ITEM Nº	CÓDIGO	DESIGNAÇÃO	DESIGNATION	QUANT.
1	7.0.037.0046	TABULEIRO SUPERIOR CONJ. ASTROLAB 2	UPPER TRAY ASSEMB. ASTROLAB 2	1
2	4.0.037.0032	ARAME LATERAL TAB SUP ASTROLAB	SIDE WIRE UPPER TRAY ASTROLAB	2
3	4.0.037.0036	ARAME POSTERIOR SUP. TAB. SUP. ASTROLAB 2	UP SIDE WIRE UPPER TRAY ASTROLAB 2	1
4	4.0.037.0034	ARAME POSTERIOR INF. TAB. SUP. ASTROLAB 2	LOW REAR WIRE UPPER TRAY ASTROLAB 2	2
5	4.0.037.0105	RESIST. ESCALDA CHAV. 420X290MM 75W 230V ASTROLAB 2	HEATING ELEMENT FOR CUP HEATING	1
6	4.0.037.0130	GRELHA TABULEIRO SUP. ASTROLAB 2	UPPER TRAY GRID ASTROLAB 2	1
7	4.0.085.0035	TAPA FUROS ø10MM	RUBBER COVER Ø10MM	2
8	4.0.001.0053	PORCA M4 INOX DIN934	M4 NUT STAINLESS STEEL DIN934	10
9	4.0.001.0055	ANILHA RECART. M4 INOX DIN6798A	KNUCKLE WASHER M4 DIN6798A	10

84 - 5.0.000.0630 - PORTA FILTRO INOX CONJ. RST BRANCO - 2 BICAS

84- FILTER HOLD. STAINLESS ST ASSEMB. RST WHITE - 2 COFFEE CUP

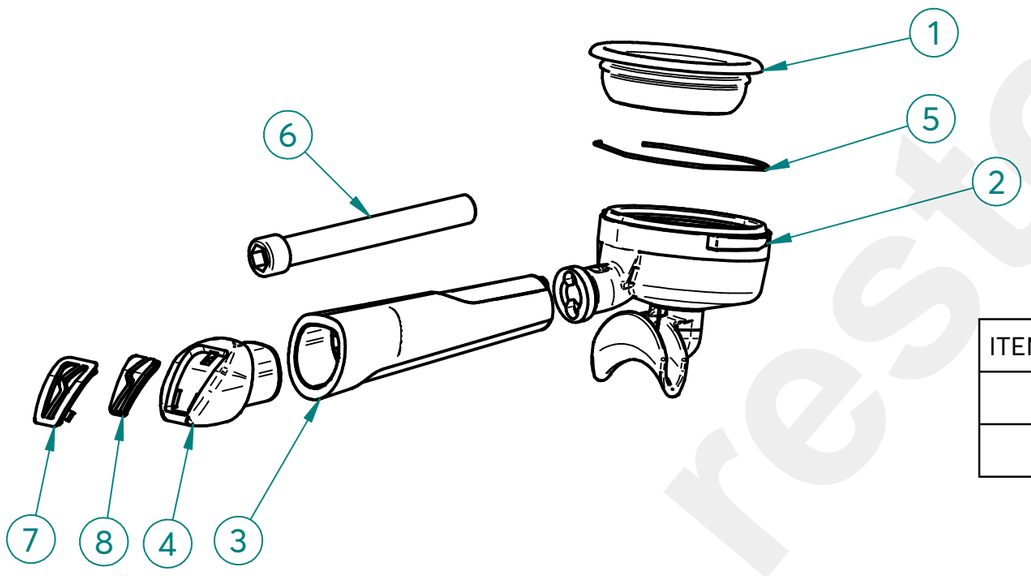

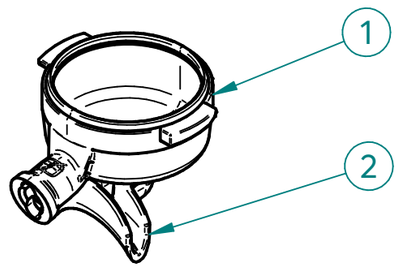

ITEM Nº	CÓDIGO	DESIGNAÇÃO	DESIGNATION	QUANT.
1	4.0.000.0752	CORPO PORTA FILTRO INOX	BODY FILTER HOLDER STAINLESS STEEL	1
2	4.0.000.0754	DISTRIBUIDOR INOX 2 BICAS	DOUBLE SPOUT STAINLESS STEEL	1

ITEM Nº	CÓDIGO	DESIGNAÇÃO	DESIGNATION	QUANT.
1	5.0.000.0173	FILTRO 2 BICAS 12 GR	2 COFFEES FILTER 12 GR	1
2	4.0.000.0751	PORTA FILTRO INOX 2 BICAS	FILTER HOLD. STAINLESS ST - 2 COFFEE CUP	1
3	4.0.007.0160-A	PUNHO PORTA FILTRO RST NV	FILTER HOLDER HANDLE RST NV	2
4	4.0.007.0163	TAMPAO CROMADO PUNHO PORTA FILTRO RST NV	CHROME FILTER HOLDER HANDLE RST	1
5	5.0.000.0411	MOLA PORTA FILTRO 1,2MM	FILTER HOLDER SPRING	1
6	4.0.007.0149	PARAFUSO UMBR. M12X100 ZINC. DIN912	CYLIND. HEAD SCREW W/ HEX. SOCKET M12X100 ZINC. DIN912	1
7	4.0.007.0166	INSERTO TAMPAO PUNHO PORTA FILTRO RST NV	INSERT FILTER HOLDER HANDLE RST	1
8	4.0.007.0170	SIMBOLO FIAMMA BRANCO PUNHO PORTA FILTRO RST NV	WHITE SYMBOL FIAMMA FILTER HOLDER HANDLE RST	1

restoranu.eu

85 - 5.0.000.0627-A - PORTA FILTRO INOX CONJ. RST BRANCO - 1 BICA

85 - FILTER HOLD. STAINLESS ST ASSEMB. RST WHITE - 1 COFFEE CUP

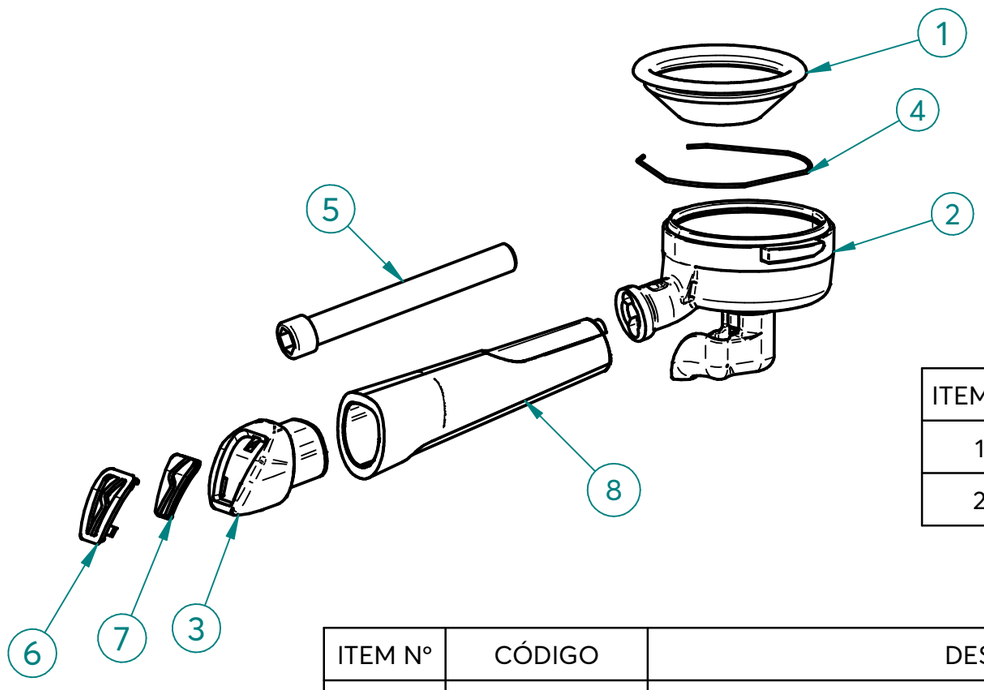

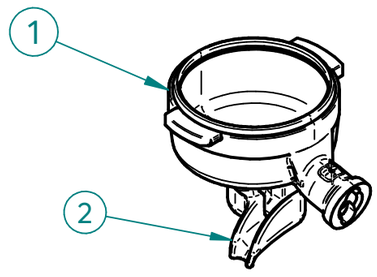

ITEM Nº	CÓDIGO	DESIGNAÇÃO	DESIGNATION	QUANT.
1	4.0.000.0752	CORPO PORTA FILTRO INOX	BODY FILTER HOLDER STAINLESS STEEL	1
2	4.0.000.0756	DISTRIBUIDOR INOX 1 BICA EM L	L SINGLE SPOUT TAINLESS STEEL	1

ITEM Nº	CÓDIGO	DESIGNAÇÃO	DESIGNATION	QUANT.
1	5.0.000.0162	FILTRO 1 BICA 6GR NV	6GR 1 CUP FILTER	1
2	4.0.000.0755	PORTA FILTRO INOX 1 BICA EM L	FILTER HOLD. STAINLESS ST - 1 COFFEE CUP IN L	1
3	4.0.007.0163	TAMPAO CROMADO PUNHO PORTA FILTRO RST NV	CHROME FILTER HOLDER HANDLE RST	1
4	5.0.000.0411	MOLA PORTA FILTRO 1,2MM	FILTER HOLDER SPRING	1
5	4.0.007.0149	PARAFUSO UMBR. M12X100 ZINC. DIN912	CYLIND. HEAD SCREW W/ HEX. SOCKET M12X100 ZINC. DIN912	1
6	4.0.007.0166	INSERTO TAMPAO PUNHO PORTA FILTRO RST NV	INSERT FILTER HOLDER HANDLE RST	1
7	4.0.007.0170	SIMBOLO FIAMMA BRANCO PUNHO PORTA FILTRO RST NV	WHITE SYMBOL FIAMMA FILTER HOLDER HANDLE RST	1
8	4.0.007.0160-A	PUNHO PORTA FILTRO RST NV	FILTER HOLDER HANDLE RST NV	1

restoranu

MÁQ. CAFÉ ASTROLAB 2 MB .24

ESPRESSO COFFEE MACHINE ASTROLAB 2 MB .24

R01

ESQUEMA ELECTRICO

Electric Scheme

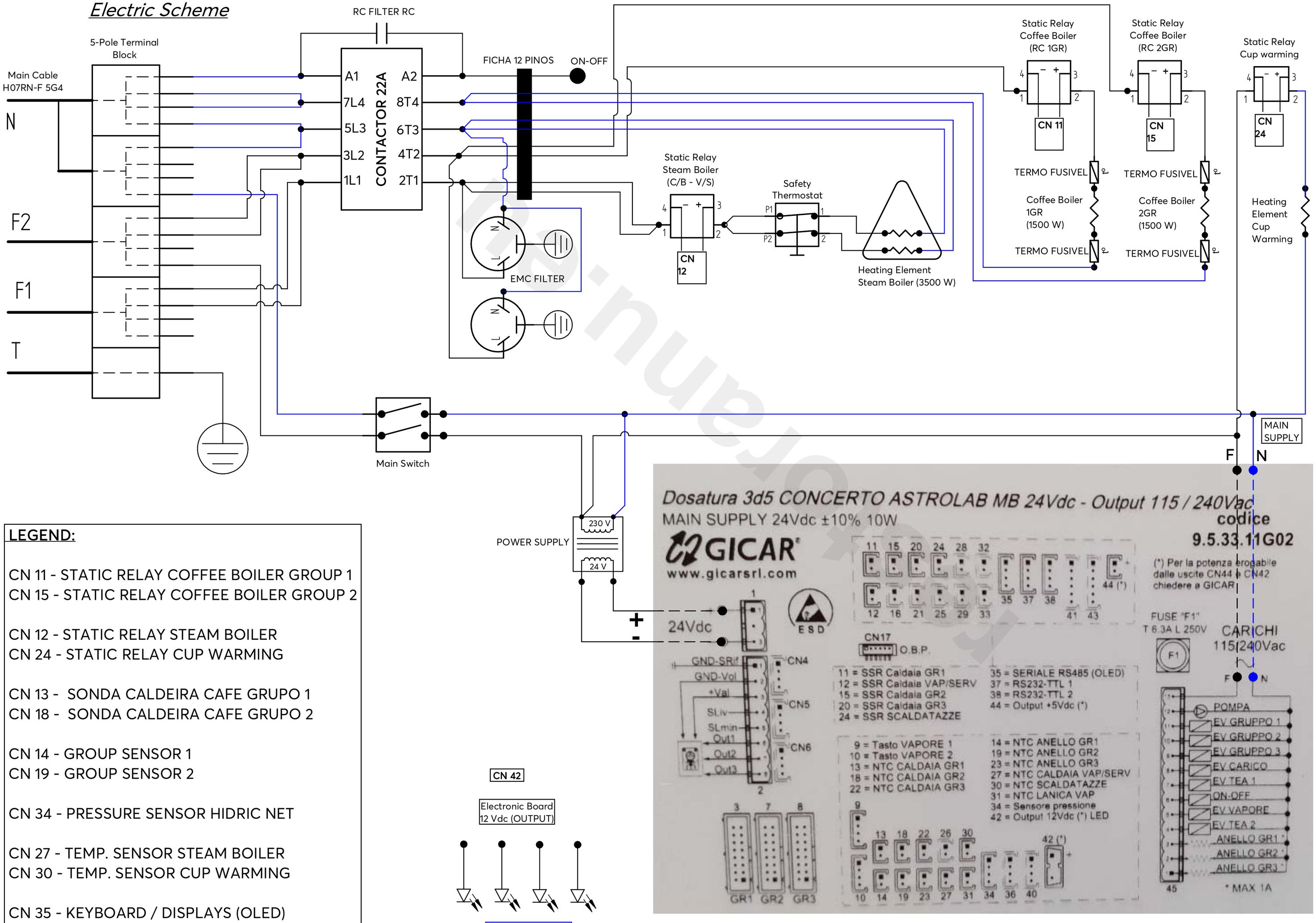

LEGEND:

CN 11 - STATIC RELAY COFFEE BOILER GROUP 1
CN 15 - STATIC RELAY COFFEE BOILER GROUP 2

CN 12 - STATIC RELAY STEAM BOILER
CN 24 - STATIC RELAY CUP WARMING

CN 13 - SONDA CALDEIRA CAFE GRUPO 1
CN 18 - SONDA CALDEIRA CAFE GRUPO 2

CN 14 - GROUP SENSOR 1
CN 19 - GROUP SENSOR 2

CN 34 - PRESSURE SENSOR HIDRIC NET

CN 27 - TEMP. SENSOR STEAM BOILER
CN 30 - TEMP. SENSOR CUP WARMING

CN 35 - KEYBOARD / DISPLAYS (OLED)

This drawing may be altered without previous notice.
Os elementos deste desenho podem ser alterados sem aviso prévio.

www.fiamma.pt

MB „Restoranų įranga" · Vito Gerulaičio 1-59, LT-08200 Vilnius · +370 614 89888 · info@restoranu.eu · www.restoranu.eu