SINCE 1977

R00

Explosion Drawing
Desenho de Explosão





restoran.eu

CARAVEL 1 RESTYLE / CARAVEL 1 TC RESTYLE

ESPRESSO COFFEE MACHINE • MÁQUINA CAFÉ ESPRESSO

CARAVEL 1 WHITE RESTYLE - 2.0.016.9000
CARAVEL 1 RESTYLE - 2.0.016.9001
CARAVEL 1 TI RESTYLE - 2.0.016.9002

CARAVEL 1 TC WHITE RESTYLE - 2.0.016.9010
CARAVEL 1 TC RESTYLE - 2.0.016.9011
CARAVEL 1 TI TC RESTYLE - 2.0.016.9012

20210317

Management System ISO 9001:2015 TÜVRheinland CERTIFIED www.tuv.com ID 9108624282

www.fiamma.pt

This drawing may be altered without previous notice.
Os elementos deste desenho podem ser alterados sem aviso prévio.

MÁQ. CAFÉ CARAVEL 1 / 1 TC RESTYLE

ESPRESSO COFFEE MACHINE CARAVEL 1 / 1 TC RESTYLE

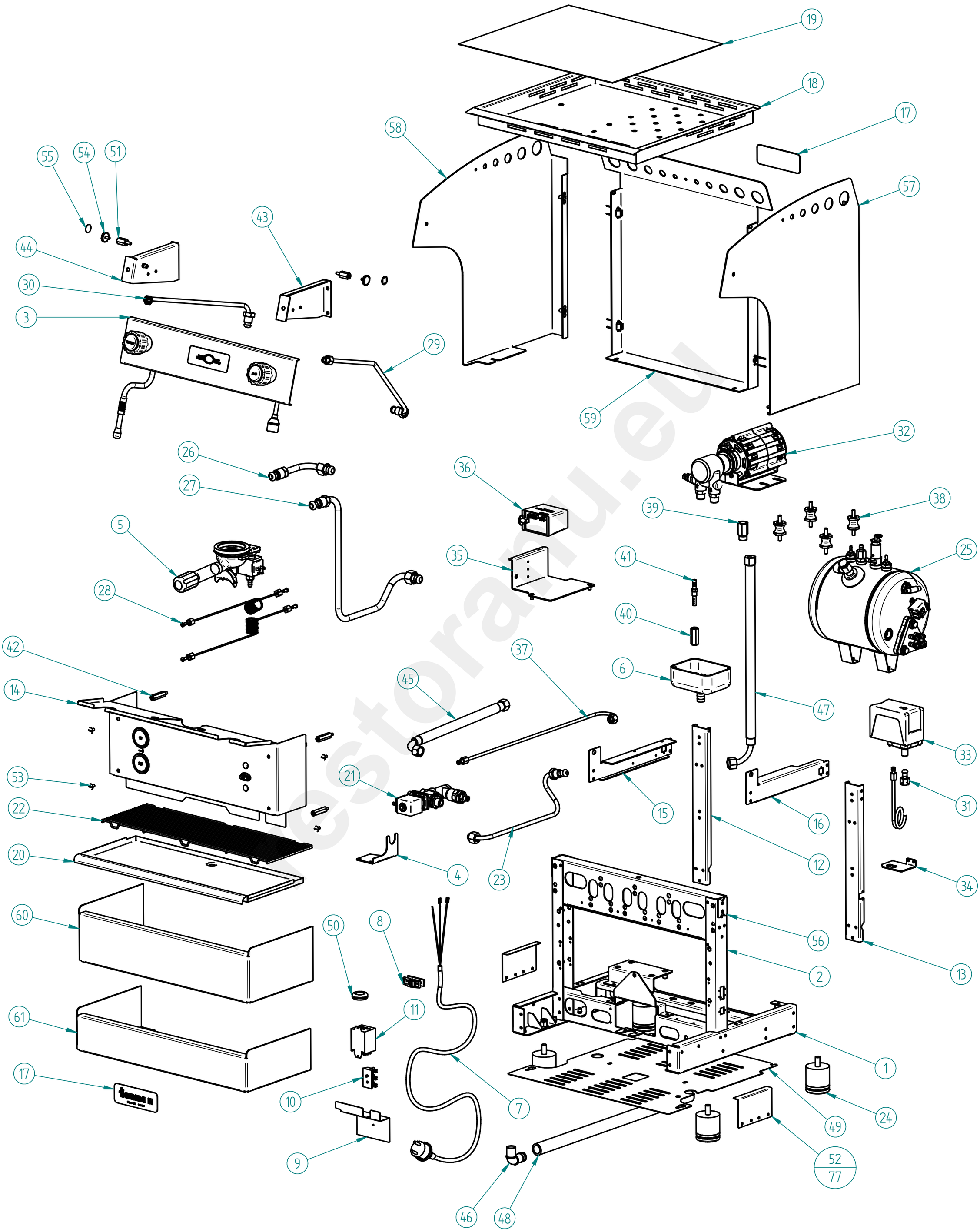

MÁQ. CAFÉ CARAVEL 1 / 1 TC RESTYLE - 2.0.016.9001 / 2.0.016.9011

ESPRESSO COFFEE MACHINE CARAVEL 1 CV / 1 CV TC RESTYLE

Management System ISO 9001:2015
TÜVRheinland CERTIFIED
www.tuv.com ID 9108624282

www.fiamma.pt

This drawing may be altered without previous notice.
Os elementos deste desenho podem ser alterados sem aviso prévio.

MÁQ. CAFÉ CARAVEL 1 / 1 TC RESTYLE

ESPRESSO COFFEE MACHINE CARAVEL 1 / 1 TC RESTYLE

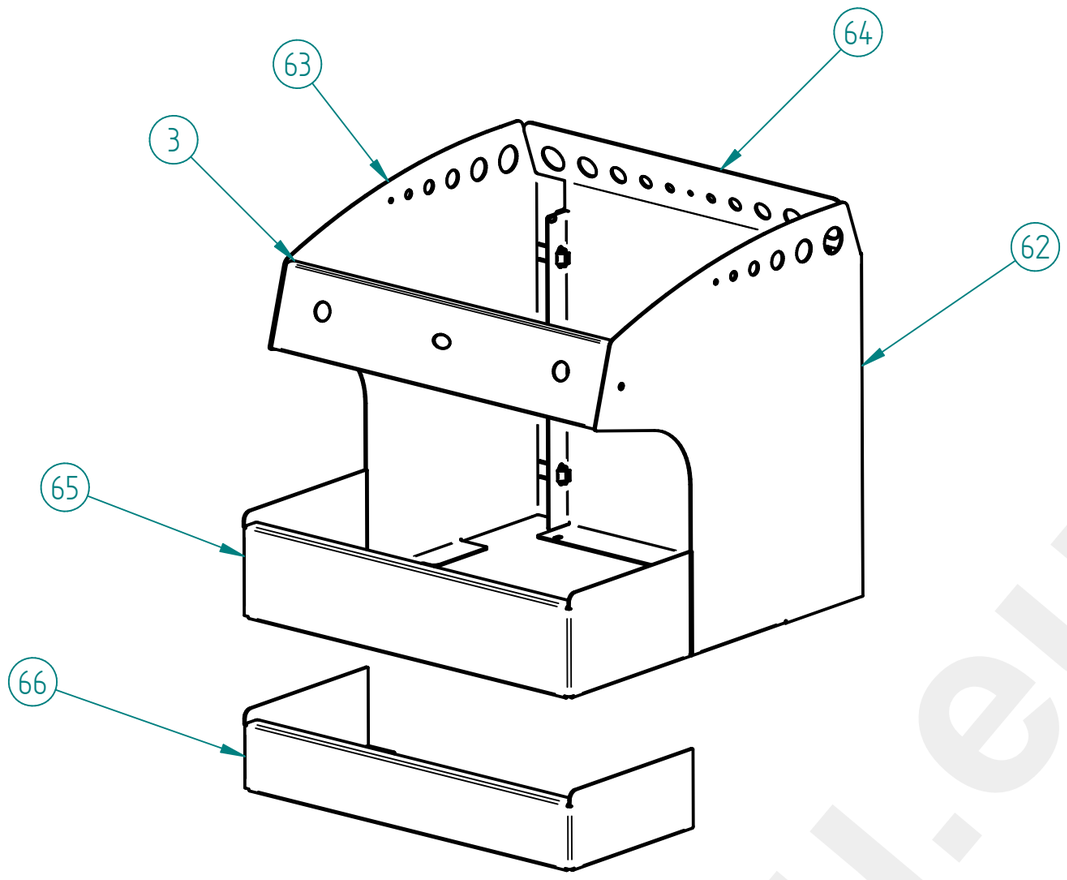

MÁQ. CAFÉ CARAVEL 1 WHITE / 1 TC WHITE RESTYLE - 2.0.016.9000 / 2.0.016.9010

ESPRESSO COFFEE MACHINE CARAVEL 1 WHITE / 1 TC WHITE RESTYLE

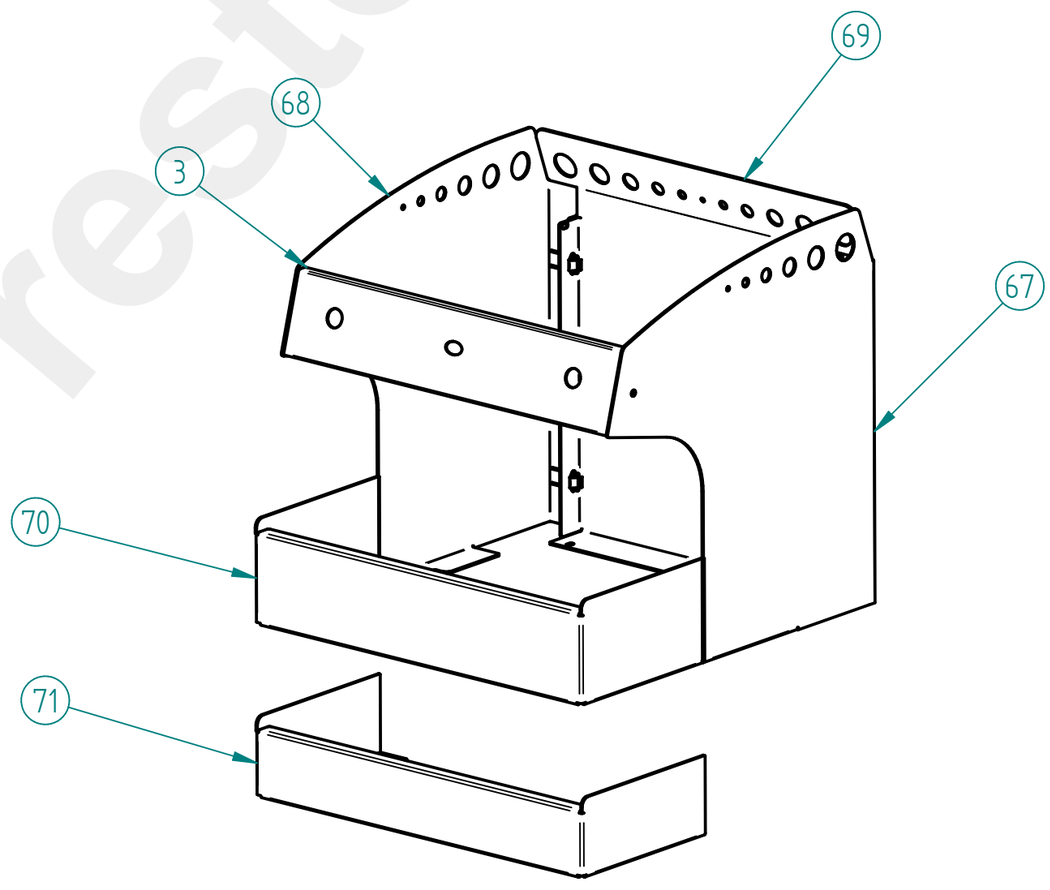

MÁQ. CAFÉ CARAVEL 1 TI / 1 V TI TC RESTYLE - 2.0.016.9002 / 2.0.016.9012

ESPRESSO COFFEE MACHINE CARAVEL 1 TI / 1 TI TC RESTYLE

restoranu.eu

MÁQ. CAFÉ CARAVEL 1 / 1 TC RESTYLE

ESPRESSO COFFEE MACHINE CARAVEL 1 / 1 TC RESTYLE

LISTA DE COMPONENTES E ACESSÓRIOS
Spare parts list

ITEM Nº	CÓDIGO	DESIGNAÇÃO	DESIGNATION	QUANT.
1	7.0.016.5511	CHASSI HORIZONTAL ATLANTIC 1 ECC	HORIZONTAL CHASSIS ATLANTIC 1 ECC	1
2	7.0.016.5512	CHASSI VERTICAL ATLANTIC 1 ECC	VERTICAL CHASSIS ATLANTIC 1 ECC	1
3		PM_PAINEL COMANDO SUPERIOR CONJ. CARAVEL 1 RESTYLE	UPPER COMMAND PANEL ASS. CARAVEL 1	1
4	7.0.016.5050	SUPORTE BLOCO ATLANTIC ECC	DISTRIBUTION GROUP SUPPORT ATLANTIC ECC	1
5		GRUPO ECC-07 C/ ACESSORIOS	ECC-07 GROUP W/ ACESS.	1
6	4.0.000.0840	DEPOSITO ESGOTO PLASTICO	DRAIN TRAY	1
7	4.0.085.0070	CABO H07RN-F 3G1,5 - 1,5MT C/ FICHA+TERM.	CABLE H07RN-F 3G1,5 - 1,5MT W/ PLUG	1
8	4.0.000.0496	CERRA CABOS PA 268	CABLE FASTENER PA 268	1
9	7.0.016.7006	SUPORTE LIGADOR 3 POLOS CARAVEL 1	3-POLE TERMINAL BLOCK SUPPORT CARAVEL 1	1
10	4.0.016.0101	LIGADOR 3 POLOS	3-POLES CONNECTOR	1
11	4.0.000.0995	RELE 16A / 230VAC	RELE 16A / 230VAC	1
12	7.0.016.1054	CANTO POSTERIOR ESQ. ATLANTIC NV	LEFT REAR SUPPORT ATLANTIC NV	1
13	7.0.016.1055	CANTO POSTERIOR DIR. ATLANTIC NV	RIGHT REAR SUPPORT ATLANTIC NV	1
14	PRE-MONTAGEM	PAINEL FRONTAL CONJ. CARAVEL 1	FRONT PANEL CARAVEL 1	1
15	7.0.016.1542	REFORÇO LATERAL SUP. ESQ. ATLANTIC REBIT	LEFT SIDE PANEL SUPPORT	1
16	7.0.016.1540	REFORÇO LATERAL SUP. DIR. ATLANTIC REBIT	RIGHT SIDE PANEL SUPPORT	1
17	7.0.000.0831	ETIQUETA INOX FIAMMA CONJ.		2
18	7.0.016.5215	TABULEIRO SUPERIOR ATLANTIC 1 ECC	UPPER TRAY ATLANTIC 1 ECC	1
19	7.0.016.5240	GRELHA REDE 430X360	WIRE MESH GRID 430X360	1
20	7.0.016.5222	TABULEIRO INFERIOR ATLANTIC 1 ECC	LOWER TRAY ATLANTIC 1 ECC	1
21	7.0.016.0065	BLOCO ENTRADA AGUA ECC-07 (AUT.) CONJ.	WATER INLET ASS.	1
22	4.0.016.7010	GRELHA TABULEIRO INF. ARAME CARAVEL 1	WIRE TRAY GRID CARAVEL 1	1
23	7.0.000.0065	TUBO BLOCO CALDEIRA	TUBE DISTRIB. GROUP/BOILER	1
24	4.0.000.0803	PE MAQ. DE CAFE 50x50	FEET FOR COFFE MACHINE 50X50	4
25		CALDEIRA 5LT C/ ACESS.	5LT BOILER W/ ACESS.	1
26	5.0.000.0945	TUBO SUP. CART. 1ºGR (DIR)/2ºGR (ESQ.) 12MM	UPPER TUBE CARTRIDGE/GROUP 12MM	1
27	5.0.000.0947	TUBO INFEROR CARTUCHO GRUPO 12mm	LOWER TUBE CARTRIDGE/GROUP 12MM	1
28	7.0.000.0022	TUBO CAPILAR 1,27X2,5X1000	CAPILLARY TUBE	2
29	7.0.000.0041	TUBO CALDEIRA TORN. AGUA ATLANTIC	TUBE BOILER/WATER TAP	1
30	7.0.000.0070	TUBO CALDEIRA TORN. VAPOR ESQ. QUADRANT	TUBE BOILER/LEFT STEAM TAP QUADRANT	1
31	7.0.000.0051	TUBO CALDEIRA PRESSOSTATO REVOL./ATLANTIC	TUBE BOILER/PRESSURE SWITCH	1
32	7.0.016.0062	MOTOR BOMBA CONJ. RPM 150W	PUMP-MOTOR ASS. RPM 150W	1
33	5.0.000.0680	PRESSOSTATO 30A/400V 0,5-1,4BAR	PRESSURE SWITCH 30A/400V 0,5-1,4BAR	1
34	7.0.016.1060	SUPORTE PRESSOSTATO MAQ. CAFE	PRESSURE SWITCH SUPPORT	1
35	7.0.016.0365	SUPORTE UNIDADE ELECT. GICAR 1GR	GICAR ELECTRONIC UNIT SUPPORT	1
36	5.0.000.1037	DETECTOR NIVEL 2 SONDAS 230V	LEVEL DETECTOR 230V	1
37	7.0.000.0044	TUBO BLOCO INJECTOR 1GR ATLANTIC	TUBE DISTRIB. GROUP/INJECTOR	1
38	4.0.000.0032	APOIO MOTOR	MOTOR SUPPORT	4
39	4.0.000.0040	PORTA FILTRO ENT. AGUA C/ FILTRO NIPLESS	FILTER HOLDER OF WATER INLET	1
40	4.0.000.0190	CAMPANULA DESCARGA GRUPO	OUTER RACORD OF THE DRAINAGE ASSEMBLY	1
41	4.0.000.0195	RACORD CAMPANULA DESCARGA GRUPO	INNER RACORD OF THE DRAINAGE ASSEMBLY	1
42	4.0.028.0070	SEPARADOR BLINDAGEM ELECTROV. GRUPOS	SHIELD GROUP SEPARATOR	4
43	7.0.016.5142	LATERAL PAINEL COM. SUP. DIR. ATLANTIC ECC	RIGTH SUPPORT UPPER CONTROL PANEL ATLANTIC ECC	1
44	7.0.016.5145	LATERAL PAINEL COM. SUP. ESQ. ATLANTIC ECC	LEFT SUPPORT UPPER CONTROL PANEL ATLANTIC ECC	1
45	5.0.000.0912	TUBO LIGAÇAO BOMBA C/ CURVA 330MM	PUMP CONNECTION W/ ELBOW 330MM	1
46	4.0.000.0845	RACORD L DEPOSITO ESGOTO PLASTICO	ANGLE RACORD	1
47	4.0.000.0818	TUBO ALIMENTAÇÃO C/ CURVA 1500MM	WATER INLET PIPE 1500MM	1
48	4.0.000.0222	TUBO ESGOTO	DRAIN TUBE	1
49	7.0.016.5070	BLINDAGEM FUNDO ATLANTIC 1 ECC	BOTTOM SHIELD ATLANTIC 1 ECC	1
50	4.0.000.0372	PASSA FIOS P/ FURO ⌀25MM	WIRE PROTECTION	1
51	4.0.016.5052	SEPARADOR PAINEL LAT. ATLANTIC ECC	SIDE PANEL SEPARATOR ATLANTIC ECC	2
52	7.0.016.7023	SUPORTE TABULEIRO INF. CARAVEL	LOWER TRAY SUPPORT CARAVEL	2
53	4.2.000.9116	PARAFUSO CAB. OVAL LARGA M5X10 NIQ	SCREW M5X10	4
54	4.0.016.5054	PARAFUSO PAINEL LAT. ATLANTIC ECC	SCREW SIDE PANEL ATLANTIC ECC	2
55	4.0.016.5056	AUTOCOLANTE PAINEL LAT. ATLANTIC ECC	SIDE PANEL STICKER ATLANTIC ECC	2
56	7.0.016.5519	CHAPA COMPENSAÇÃO CHASSI VERT. ATLANTIC ECC	COMPENSATION PLATE VERT. CHASSIS ATLANTIC ECC	2
57	7.0.016.7102	PAINEL LATERAL DIR. PINT. BLACK CARAVEL	RIGHT SIDE PANEL BLACK CARAVEL	1
58	7.0.016.7112	PAINEL LATERAL ESQ. PINT. BLACK CARAVEL	LEFT SIDE PANEL BLACK CARAVEL	1
59	7.0.016.7122	PAINEL POSTERIOR PINT. BLACK CARAVEL 1	REAR PANEL BLACK CARAVEL 1	1
60	7.0.016.7466	PAINEL COMANDO INF. PINT. BLACK CARAVEL 1	LOWER CONTROL PANEL CARAVEL 1 - BLACK PAINTED	1
61	7.0.016.7461	PAINEL COMANDO INF. PINT. BLACK CARAVEL 1 TC	LOWER CONTROL PANEL CARAVEL 1 TC - BLACK PAINTED	1
62	7.0.016.7101	PAINEL LATERAL DIR. PINT. WHITE CARAVEL	RIGHT SIDE PANEL WHITE CARAVEL	1
63	7.0.016.7111	PAINEL LATERAL ESQ. PINT. WHITE CARAVEL	LEFT SIDE PANEL WHITE CARAVEL	1
64	7.0.016.7121	PAINEL POSTERIOR PINT. WHITE CARAVEL 1	REAR PANEL WHITE CARAVEL 1	1
65	7.0.016.7467	PAINEL COMANDO INF. PINT. WHITE CARAVEL 1	LOWER CONTROL PANEL CARAVEL 1 - WHITE PAINTED	1
66	7.0.016.7462	PAINEL COMANDO INF. PINT. WHITE CARAVEL 1 TC	LOWER CONTROL PANEL CARAVEL 1 TC - WHITE PAINTED	1
67	7.0.016.7405	PAINEL LATERAL DIR. INOX CARAVEL	RIGHT SIDE PANEL CARAVEL - STAINLESS STEEL	1
68	7.0.016.7415	PAINEL LATERAL ESQ. INOX CARAVEL	LEFT SIDE PANEL CARAVEL - STAINLESS STEEL	1
69	7.0.016.7425	PAINEL POSTERIOR INOX CARAVEL 1	REAR PANEL CARAVEL 1 - STAINLESS STEEL	1
70	7.0.016.7459	PAINEL COMANDO INF. CARAVEL 1	LOWER CONTROL PANEL CARAVEL 1	1
71	7.0.016.7457	PAINEL COMANDO INF. CARAVEL 1 TC	LOWER CONTROL PANEL CARAVEL 1 TC	1
72*	7.0.016.5223	SUPORTE TABULEIRO INF. ATLANTIC ECC	LOWER TRAY SUPPORT ATLANTIC ECC	2

Management System ISO 9001:2015 TÜVRheinland CERTIFIED www.tuv.com ID 9108624282

www.fiamma.pt

This drawing may be altered without previous notice.
Os elementos deste desenho podem ser alterados sem aviso prévio.

MÁQ. CAFÉ CARAVEL 1 / 1 TC RESTYLE

ESPRESSO COFFEE MACHINE CARAVEL 1 / 1 TC RESTYLE

3 – PAINEL COMANDO SUPERIOR CONJ. CARAVEL 1 RESTYLE

3 – UPPER COMMAND PANEL ASS. CARAVEL 1 RESTYLE

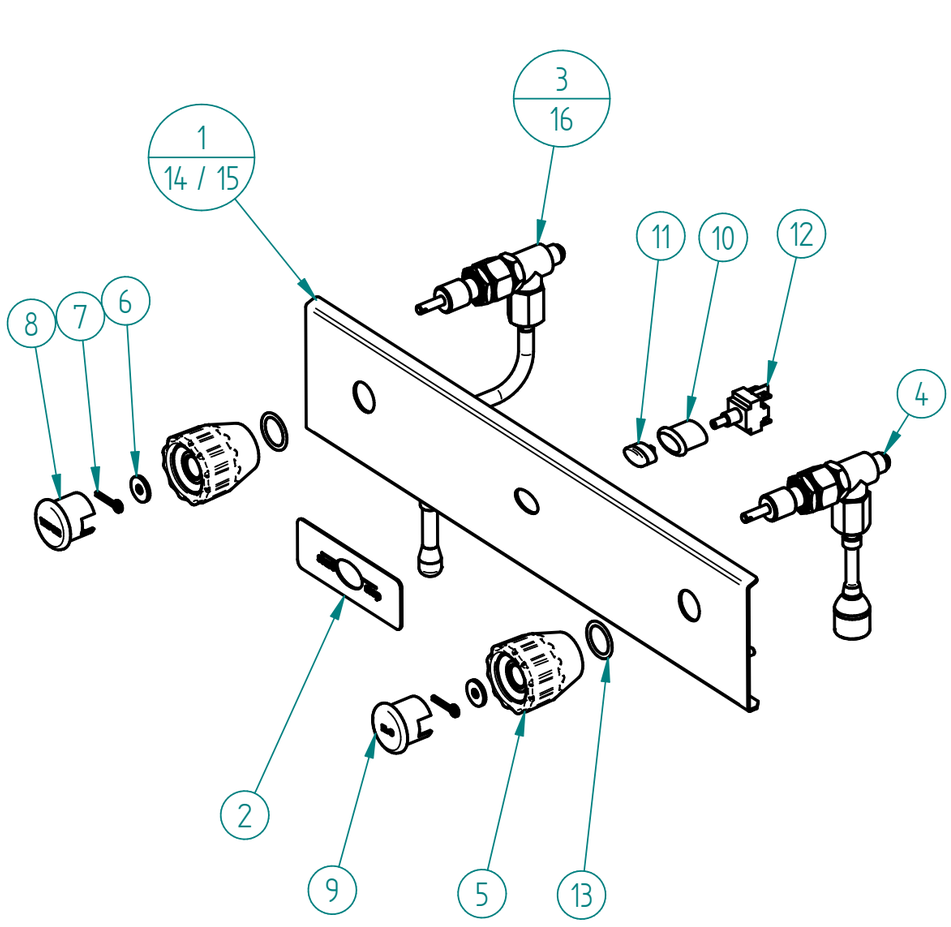

ITEM Nº	CÓDIGO	DESIGNAÇÃO	DESIGNATION	QUANT.
1	7.0.016.7190	PAINEL COMANDO SUP. PINT. BLACK CARAVEL 1	UPPER CONT. PANEL CARAVEL 1 – BLACK PAINTED	1
2	7.0.016.7170	PAINEL PERS. INOX CARAVEL 1 CONJ.	STAINLESS STEEL COSTUM. PANEL CARAVEL 1	1
3	7.0.016.0069	TORNEIRA ECC-07 G1/4-G1/8F (CONJ. VAPOR) LC	STEAM TAP ASS. ECC-07	1
4	4.0.016.0021	TORNEIRA ECC-07 G1/4-G1/8F (CONJ. AGUA)	WATER TAP ASS. ECC-07	1
5	4.0.028.0023	MANIPULO TORNEIRA ECC-07 STAR	TAP HANDLE STAR	2
6	4.0.016.0024	ANILHA LATAO 2MM MAN. TORN. ECC-07	MS WASHER 2MM	2
7	4.0.016.0025	GOLPILHA INOX MAN. TORN. ECC-07	TAP ECC-07 LOCKER	2
8	4.0.016.0027	TAMPAO MAN. TORN. ECC-07 (VAPOR)	ECC-07 TAP HANDLE COVER (STEAM)	1
9	4.0.016.0028	TAMPAO MAN. TORN. ECC-07 (AGUA)	ECC-07 TAP HANDLE COVER (WATER)	1
10	4.0.000.0503	CAIXA ELIPSE D16	BOX D16 ELIPSE	1
11	4.0.000.0507	TASTO ELIPSE D16	SWITCH KEY D16	1
12	4.0.000.0513	INTERRUPTOR BIPOLAR E0070	TWO POLES SWITCH E0070	1
13	4.0.000.0011	ANILHA 20X26MM (G1/2) COBRE	GASKET G1/2 CU	2
14*	7.0.016.7191	PAINEL COMANDO SUP. PINT. WHITE CARAVEL 1	UPPER CONT. PANEL CARAVEL 1 – WHITE PAINTED	1
15*	7.0.016.5437	PAINEL COMANDO SUP. ATLANTIC 1 ECC	UPPER CONTROL PANEL ATLANTIC 1 ECC	1
16*	4.0.016.0020	TORNEIRA ECC-07 G1/4-G1/8F (CONJ. VAPOR)	STEAM TAP ASS. ECC-07	1

3 – 7.0.016.0069 – TORNEIRA ECC-07 G1/4-G1/8F (CONJ. VAPOR) LC

3 – STEAM TAP LC ASS. ECC-07

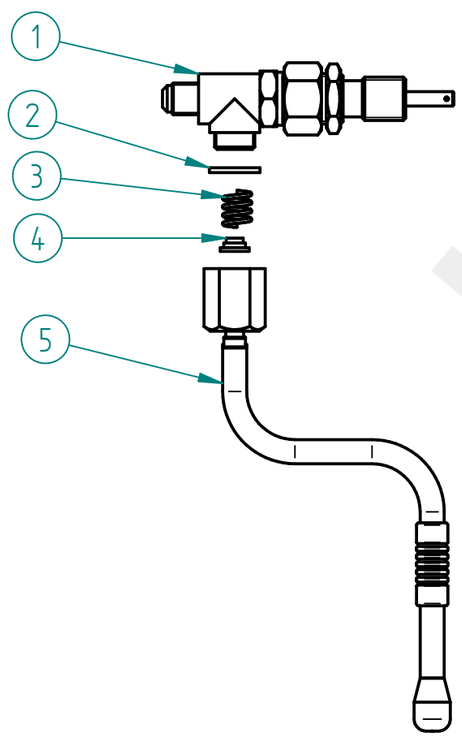

ITEM Nº	CÓDIGO	DESIGNAÇÃO	DESIGNATION	QUANT.
1	5.0.016.0350	TORNEIRA ECC-07 G1/4-G1/8F	TAP ECC-07	1
2	5.0.025.1386	JUNTA TEFLON 21X16,8X2	TEFLON GASKET	1
3	5.0.025.7060	MOLA TUBO AGUA/VAPOR TORN. EVOL.	SPRING TAP	1
4	5.0.025.6508	GUIA MOLA TUBO AGUA/VAPOR TORN. EVOL.	GUIDE BUSH	1
5	5.0.016.7320	TUBO TORNEIRA VAPOR CARAVEL (CONJ.)	STEAM TAP TUBE CARAVEL ASS.	1

restoranu

MÁQ. CAFÉ CARAVEL 1 / 1 TC RESTYLE

ESPRESSO COFFEE MACHINE CARAVEL 1 / 1 TC RESTYLE

OPCIONAL:

3 - 7.0.016.0069 - TORNEIRA ECC-07 G1/4-G1/8F (CONJ. VAPOR) COOL TOUCH LC

3 - STEAM TAP COOL TOUCH LC ASS. ECC-07

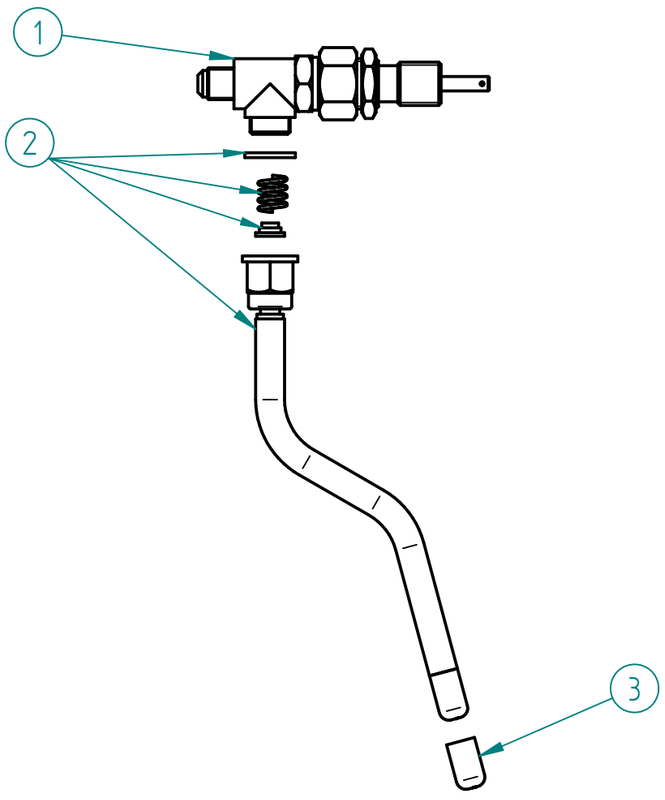

ITEM Nº	CÓDIGO	DESIGNAÇÃO	DESIGNATION	QUANT.
1	5.0.016.0350	TORNEIRA ECC-07 G1/4-G1/8F	TAP ECC-07	1
2	5.0.007.0340	TUBO TORNEIRA VAPOR COOL TOUCH (CONJ.) LOW CUPS	COOL TOUCH STEAM TAP TUBE	1
3	5.0.028.0345	ESPALHADOR VAPOR TORN. COOL TOUCH - 3 FUROS	SPRAYER OF THE COOL TOUCH STEAM TAP - 3 HOLES	1

3 - 7.0.016.0076 -TORNEIRA ALAVANCA G1/4-G3/8 RST (CONJ. VAPOR) LC

3 - STEAM TAP LC ASS. G1/4-G3/8 RST

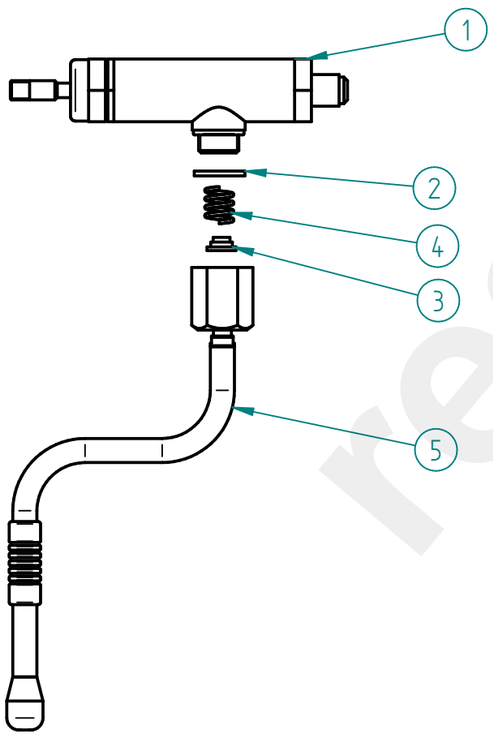

ITEM Nº	CÓDIGO	DESIGNAÇÃO	DESIGNATION	QUANT.
1	5.0.007.0010	TORNEIRA ALAVANCA G1/4-G3/8 RST	LEVER TAP G1/4-G3/8 RST	1
2	5.0.025.1386	JUNTA TEFLON 21X16,8X2	TEFLON GASKET	1
3	5.0.025.6508	GUIA MOLA TUBO AGUA/VAPOR TORN. EVOL.	GUIDE BUSH	1
4	5.0.025.7060	MOLA TUBO AGUA/VAPOR TORN. EVOL.	SPRING TAP	1
5	5.0.016.7320	TUBO TORNEIRA VAPOR CARAVEL (CONJ.)	STEAM TAP TUBE CARAVEL ASS.	1

PEÇAS P/ ADAPTADOR MANIPULO / TAP KNOB ADAPTER PARTS

CÓDIGO	DESIGNAÇÃO	DESIGNATION	QUANT.
5.0.007.0011-A	RACORD ADAPT. TR18X4A2P-M8F TORN. ALAVANCA RST	RACORD ADAPT. LEVER TAP RST	1
5.0.007.0012	PARAFUSO SEM CAB. UMBR. M8X10 ZINC. DIN916	ZINC-PLATED SOCKET SET SCREW M8X10 DIN916	1



restoranu.eu

MÁQ. CAFÉ CARAVEL 1 / 1 TC RESTYLE

ESPRESSO COFFEE MACHINE CARAVEL 1 / 1 TC RESTYLE

MÁQUINAS GRUPOS ALTOS / TALL CUPS MACHINES

16 - 4.0.016.0020 - TORNEIRA ECC-07 G1/4-G1/8F (CONJ. VAPOR)

16 - STEAM TAP G1/4-G1/8F ASSEMB. (GR.ECC-07)

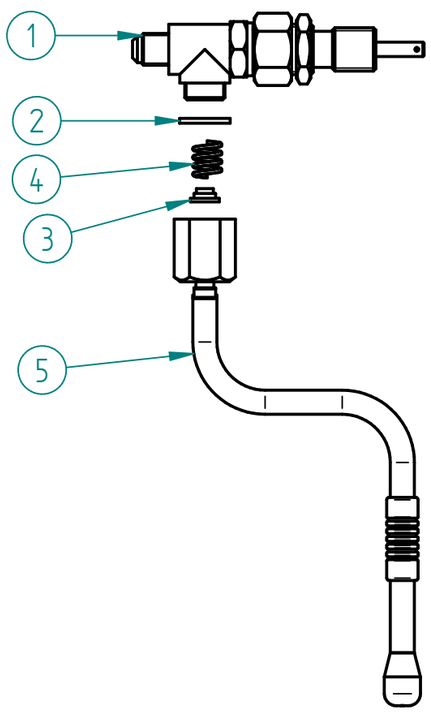

ITEM Nº	CODIGO	DESIGNAÇÃO	DESIGNATION	QUANT.
1	5.0.016.0350	TORNEIRA ECC-07 G1/4-G1/8F	TAP ECC-07	1
2	5.0.025.1386	JUNTA TEFLON 21X16,8X2	TEFLON GASKET	1
3	5.0.025.6508	GUIA MOLA TUBO AGUA/VAPOR TORN. EVOL.	GUIDE BUSH	1
4	5.0.025.7060	MOLA TUBO AGUA/VAPOR TORN. EVOL.	SPRING TAP	1
5	5.0.016.0320	TUBO TORNEIRA VAPOR ATLANTIC (CONJ.)	STEAM TAP TUBE ASS.	1

OPCIONAL:

16 - 7.0.016.0075 -TORNEIRA ALAVANCA G1/4-G3/8 RST (CONJ. VAPOR)

16 - COOL TOUCH TAP G1/4-G3/8 RST (STEAM ASS.) LC

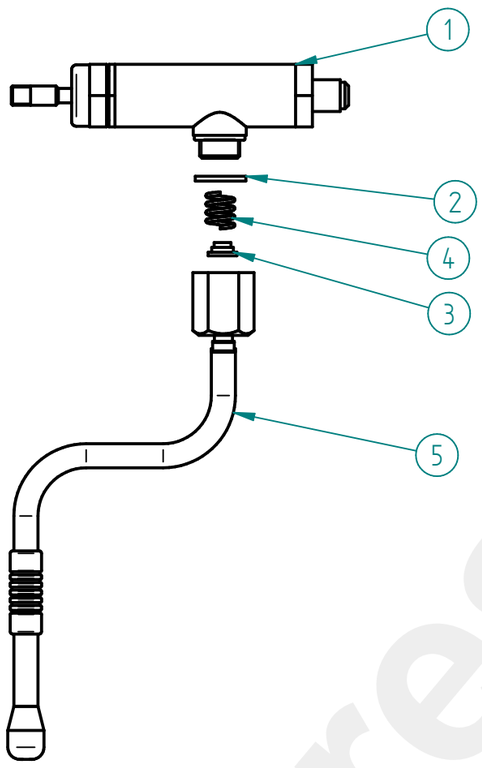

ITEM Nº	CÓDIGO	DESIGNAÇÃO	DESIGNATION	QUANT.
1	5.0.007.0010	TORNEIRA ALAVANCA G1/4-G3/8 RST	LEVER TAP G1/4-G3/8 RST	1
2	5.0.025.1386	JUNTA TEFLON 21X16,8X2	TEFLON GASKET	1
3	5.0.025.6508	GUIA MOLA TUBO AGUA/VAPOR TORN. EVOL.	GUIDE BUSH	1
4	5.0.025.7060	MOLA TUBO AGUA/VAPOR TORN. EVOL.	SPRING TAP	1
5	5.0.016.0320	TUBO TORNEIRA VAPOR ATLANTIC (CONJ.)	STEAM TAP TUBE ASS.	1

PEÇAS P/ ADAPTADOR MANIPULO / TAP KNOB ADAPTER PARTS

CÓDIGO	DESIGNAÇÃO	DESIGNATION	QUANT.
5.0.007.0011-A	RACORD ADAPT. TR18X4A2P-M8F TORN. ALAVANCA RST	RACORD ADAPT. LEVER TAP RST	1
5.0.007.0012	PARAFUSO SEM CAB. UMBR. M8X10 ZINC. DIN916	ZINC-PLATED SOCKET SET SCREW M8X10 DIN916	1

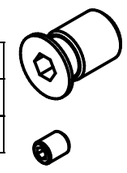

3/16 - 7.0.007.0151 -TORNEIRA ALAVANCA G1/4-G3/8 RST (CONJ. VAPOR) COOL TOUCH LC

3/16 - COOL TOUCH TAP G1/4-G3/8 RST (STEAM ASS.) LC

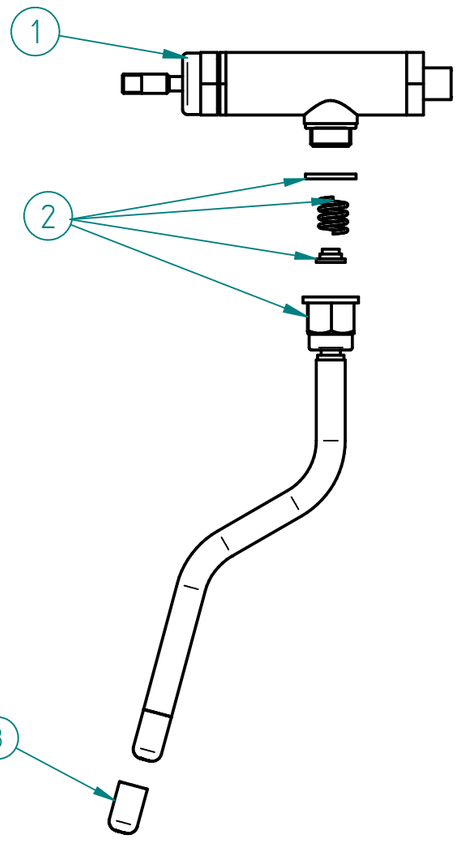

ITEM Nº	CÓDIGO	DESIGNAÇÃO	DESIGNATION	QUANT.
1	5.0.007.0010	TORNEIRA ALAVANCA G1/4-G3/8 RST	LEVER TAP G1/4-G3/8 RST	1
2	5.0.007.0340	TUBO TORNEIRA VAPOR COOL TOUCH (CONJ.) LOW CUPS	COOL TOUCH STEAM TAP TUBE	1
3	5.0.028.0345	ESPALHADOR VAPOR TORN. COOL TOUCH - 3 FUROS	SPRAYER OF THE COOL TOUCH STEAM TAP - 3 HOLES	1

PEÇAS P/ ADAPTADOR MANIPULO / TAP KNOB ADAPTER PARTS

CÓDIGO	DESIGNAÇÃO	DESIGNATION	QUANT.
5.0.007.0011-A	RACORD ADAPT. TR18X4A2P-M8F TORN. ALAVANCA RST	RACORD ADAPT. LEVER TAP RST	1
5.0.007.0012	PARAFUSO SEM CAB. UMBR. M8X10 ZINC. DIN916	ZINC-PLATED SOCKET SET SCREW M8X10 DIN916	1



restoranu.eu

fiamma RST TÜVRheinland CERTIFIED Management System ISO 9001:2015 www.tuv.com ID 9108624282

www.fiamma.pt

This drawing may be altered without previous notice.
Os elementos deste desenho podem ser alterados sem aviso prévio.

MÁQ. CAFÉ CARAVEL 1 / 1 TC RESTYLE

ESPRESSO COFFEE MACHINE CARAVEL 1 / 1 TC RESTYLE

4 - 4.0.016.0021 - TORNEIRA ECC-07 G1/4-G1/8F (CONJ. AGUA)

4 - WATER TAP ASS. ECC-07

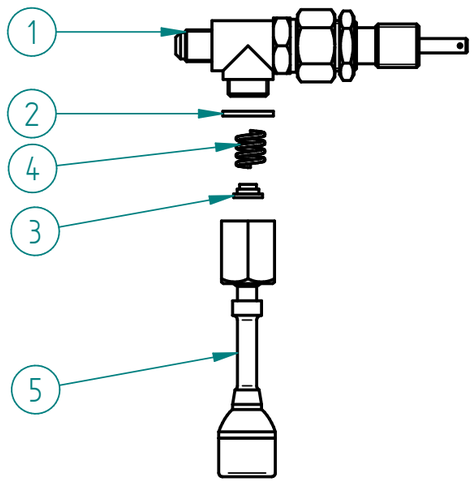

ITEM Nº	CODIGO	DESIGNAÇÃO	DESIGNATION	QUANT.
1	5.0.016.0350	TORNEIRA ECC-07 G1/4-G1/8F	TAP ECC-07	1
2	5.0.025.1386	JUNTA TEFLON 21X16,8X2	TEFLON GASKET	1
3	5.0.025.6508	GUIA MOLA TUBO AGUA/VAPOR TORN. EVOL.	GUIDE BUSH	1
4	5.0.025.7060	MOLA TUBO AGUA/VAPOR TORN. EVOL.	SPRING TAP	1
5	5.0.016.0330	TUBO TORNEIRA AGUA ATLANTIC (CONJ.)	WATER TAP TUBE ASS.	1

OPCIONAL:

4 - 7.0.007.0155 - TORNEIRA ALAVANCA G1/4-G3/8 RST (CONJ. AGUA)

4 - TAP G1/4-G3/8 RST (WATER ASS.)

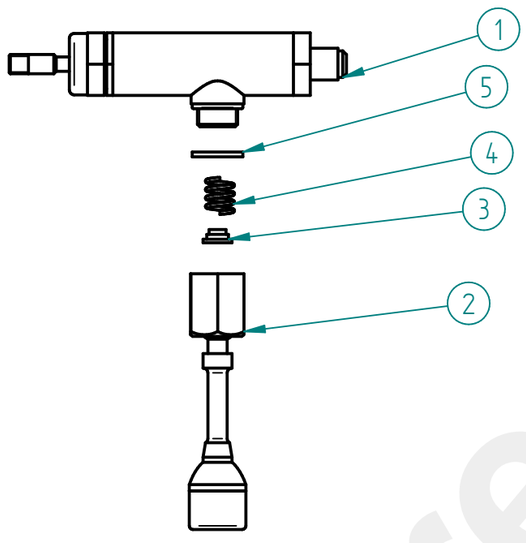

ITEM Nº	CÓDIGO	DESIGNAÇÃO	DESIGNATION	QUANT.
1	5.0.007.0010	TORNEIRA ALAVANCA G1/4-G3/8 RST	LEVER TAP G1/4-G3/8 RST	1
2	5.0.016.0330	TUBO TORNEIRA AGUA ATLANTIC (CONJ.)	WATER TAP TUBE ASS.	1
3	5.0.025.6508	GUIA MOLA TUBO AGUA/VAPOR TORN. EVOL.	GUIDE BUSH	1
4	5.0.025.7060	MOLA TUBO AGUA/VAPOR TORN. EVOL.	SPRING TAP	1
5	5.0.025.1386	JUNTA TEFLON 21X16,8X2	TEFLON GASKET	1

PEÇAS P/ ADAPTADOR MANIPULO / TAP KNOB ADAPTER PARTS

CÓDIGO	DESIGNAÇÃO	DESIGNATION	QUANT.
5.0.007.0011-A	RACORD ADAPT. TR18X4A2P-M8F TORN. ALAVANCA RST	RACORD ADAPT. LEVER TAP RST	1
5.0.007.0012	PARAFUSO SEM CAB. UMBR. M8X10 ZINC. DIN916	ZINC-PLATED SOCKET SET SCREW M8X10 DIN916	1



restoranu.eu

MÁQ. CAFÉ CARAVEL 1 / 1 TC RESTYLE

ESPRESSO COFFEE MACHINE CARAVEL 1 / 1 TC RESTYLE

5.0.016.0350 – TORNEIRA ECC-07 G1/4-G1/8F

TAP ECC-07

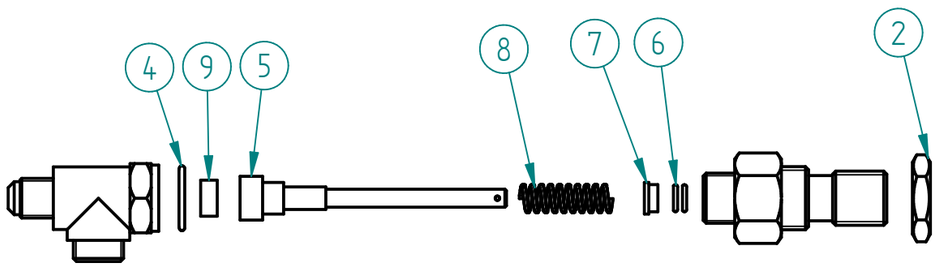

ITEM Nº	CODIGO	DESIGNAÇÃO	DESIGNATION	QUANT.
2	4.0.155.0015	PORCA G1/2 LATAO	BRASS NUT G1/2	1
4	5.0.016.0303	JUNTA COBRE 22X17X2MM TORN. ECC-07	TAP GASKET	1
5	5.0.016.0308	VEIO TORNEIRA ECC-07	TAP ECC-07 SHAFT	1
6	5.0.016.0306	ORING VEIO TORN. ECC-07	TAP SHAFT ORING	2
7	5.0.016.0305	CASQUILHO VEIO TORN. ECC-07	METAL SLEEVE	1
8	5.0.016.0302	MOLA VEIO TORN. ECC-07	TAP SHAFT SPRING	1
9	5.0.016.0301	VEDANTE BORRACHA TORN. ECC-07	TAP ECC-07 GASKET	1

5.0.016.0320 – TUBO TORNEIRA VAPOR ATLANTIC (CONJ.)

STEAM TAP TUBE ASS.

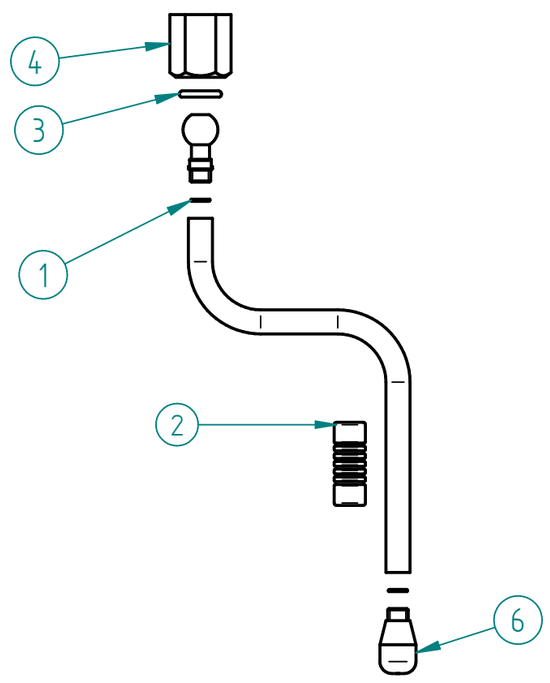

ITEM Nº	CODIGO	DESIGNAÇÃO	DESIGNATION	QUANT.
1	5.0.016.0323	ORING 6X1 TUBO VAPOR ATLANTIC	ORING 6X1	2
2	4.0.000.0814	PINÇA ISOLANTE TUBO VAPOR 10MM	INSULATING HANDGRIP 10MM	1
3	5.0.025.0205	ORING 12,1x2,7 PORCA TUBO TORN.	ORING 12,1x2,7	1
4	5.0.016.0321	PORCA TUBO TORN. ATLANTIC	TAP TUBE NUT	1
6	5.0.028.0328	ESPALHADOR VAPOR TORN. PACIFIC M8,5X0,75 – 3 FUROS	SPRAYER OF THE STEAM TAP – 3 HOLES	1

5.0.016.0330 – TUBO TORNEIRA AGUA ATLANTIC (CONJ.)

WATER TAP TUBE ASS.

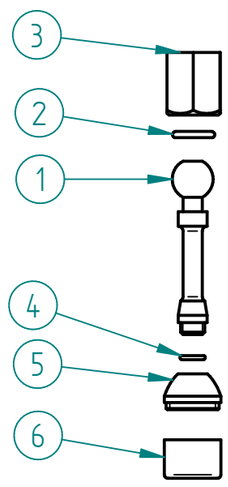

ITEM Nº	CODIGO	DESIGNAÇÃO	DESIGNATION	QUANT.
1	5.0.016.0331	TUBO TORNEIRA AGUA CROM. ATLANTIC	WATER TAP TUBE	1
2	5.0.025.0205	ORING 12,1x2,7 PORCA TUBO TORN.	ORING 12,1x2,7	1
3	5.0.016.0321	PORCA TUBO TORN. ATLANTIC	TAP TUBE NUT	1
4	5.0.000.0565	ORING 7,2X1,9 VEIO TORN. BR-03	TAP SHAFT ORING	1
5	5.0.000.0640	PONTEIRA TUBO ÁGUA	POINT OF THE WATER TUBE	1
6	5.0.000.0148	ESPALHADOR PONTEIRA ÁGUA	SPRAYER OF THE WATER POINT	1

5.0.007.0010 – TORNEIRA ALAVANCA G1/4-G3/8 RST

LEVER TAP G1/4-G3/8 RST

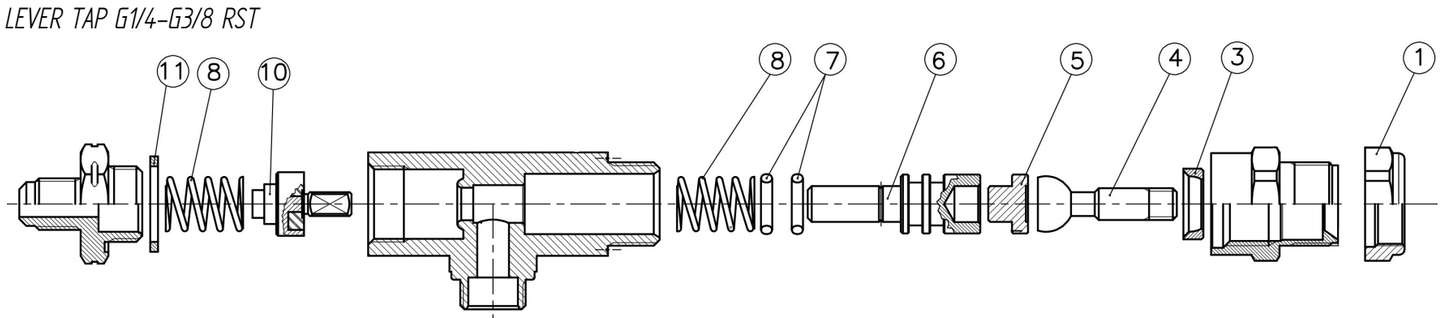

ITEM	CÓDIGO	DESIGNAÇÃO	DESIGNATION	QUANT.
1	5.0.007.0311	PORCA M21X1 CROM. TORN. ALAVANCA	NUT M21X1 CROM. LEVER TAP	1
3	5.0.007.0309	INSERTO AÇO NITRO. TORN ALAVANCA	STEEL INSERT LEVER TAP	1
4	5.0.007.0308	VEIO FRONTAL AÇO NITRO. C/ ESFERA TORN. ALAVANCA	FRONT SHAFT LEVER TAP	1
5	5.0.007.0307	CASQUILHO AÇO NITRO. TORN. ALAVANCA	METAL SLEEVE LEVER TAP	1
6	5.0.007.0305	VEIO POSTERIOR PORTA ORINGS TORN. ALAVANCA	REAR SHAFT LEVER TAP	1
7	5.0.007.0306	ORING VEIO POST. TORN. ALAVANCA	REAR SHAFT ORING LEVER TAP	2
8	5.0.007.0304	MOLA VEIO TORN. ALAVANCA	SHAFT SPRING LEVER TAP	2
10	5.0.007.0301	VALVULA ANTI-RETORNO TORN. ALAVANCA	ANTI-BACKFLOW VALVE LEVER TAP	1
11	5.0.007.0302	JUNTA TEFLON 24X19X2 TORN. ALAVANCA	TEFLON GASKET 24X19X2MM LEVER TAP	1

restoranu

MÁQ. CAFÉ CARAVEL 1 / 1 TC RESTYLE

ESPRESSO COFFEE MACHINE CARAVEL 1 / 1 TC RESTYLE

5 - GRUPO ECC-07 C/ ACESSORIOS

5 - ECC-07 GROUP W/ ACESS.

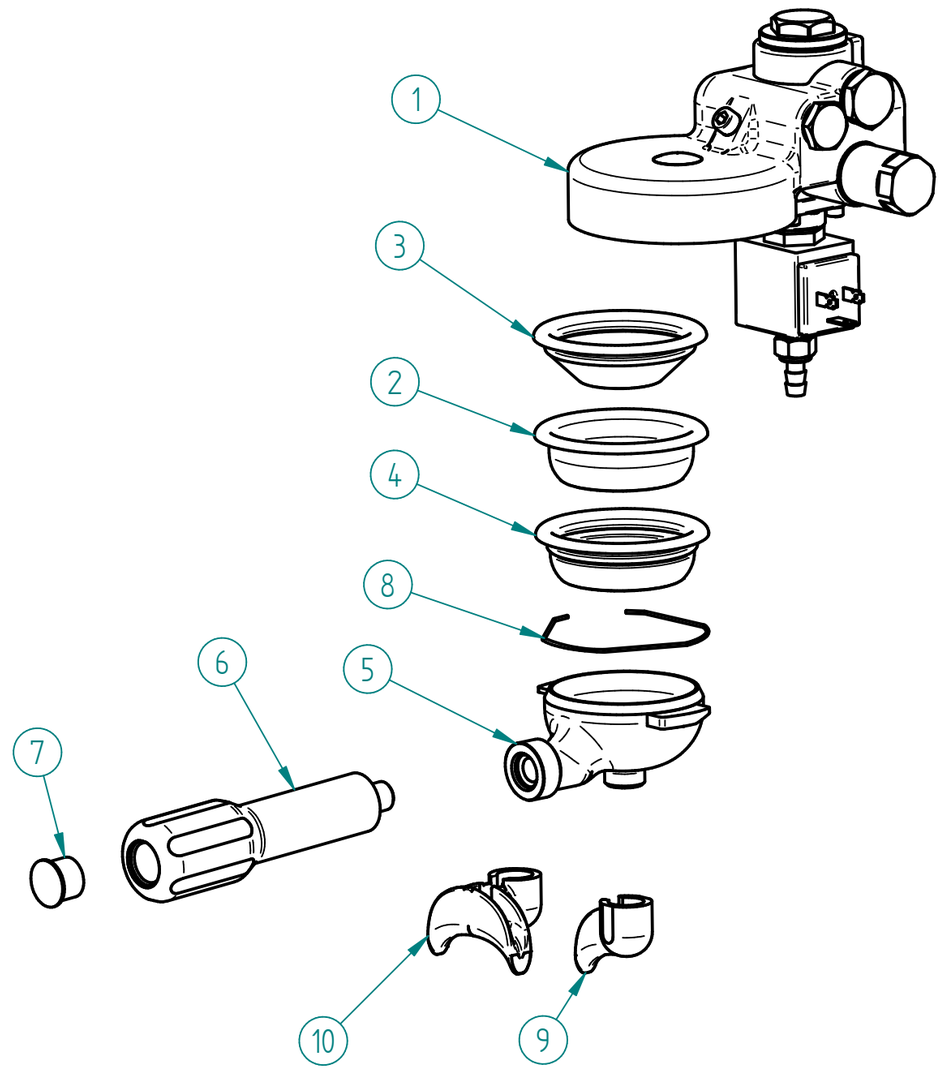

ITEM Nº	CÓDIGO	DESIGNAÇÃO	DESIGNATION	QUANT.
1	7.0.016.0080	GRUPO ECC-07 CONJ.	ECC-07 GROUP ASS.	1
2	5.0.000.0167	FILTRO CEGO	BLIND FILTER	1
3	5.0.000.0162	FILTRO 1 BICA 6GR NV	6GR 1 CUP FILTER	1
4	5.0.000.0173	FILTRO 2 BICAS 12 GR	2 COFFEES FILTER 12 GR	1
5	5.0.000.0657	PORTA FILTRO INCLIN. - FIX. 6 MM	FILTER HOLDER	1
6	5.0.000.0655	PUNHO PORTA FILTRO INCLIN.	HANDGRIP FOR FILTER HOLDER	1
7	5.0.000.0654	TAMPA PUNHO PORTA FILTRO INCLIN.	PLUG FOR HANDGRIP	1
8	5.0.000.0411	MOLA PORTA FILTRO 1,2MM	FILTER HOLDER SPRING	1
9	5.0.000.0104	DISTRIBUIDOR 1 BICA CURVO	1 COFFEE SPECIAL OUTLET	1
10	5.0.000.0106	DISTRIBUIDOR 2 BICAS	2 COFFEES OUTLET	1

CÓDIGO	DESIGNAÇÃO	DESIGNATION
5.0.000.0651	PORTA FILTRO M12 INCLIN. CONJ. - 1 BICA	1 COFFEE FILTER HOLDER ASS.
5.0.000.0652	PORTA FILTRO M12 INCLIN. CONJ. - 2 BICAS	2 COFFEE FILTER HOLDER ASS.
5.0.000.0668	PORTA FILTRO M12 INCLIN. CONJ. - CAPSULAS	CAPSULES FILTER HOLDER ASS.

1 - 7.0.016.0080 - GRUPO ECC-07 CONJ.

1 - GROUP ECC-07 ASS.

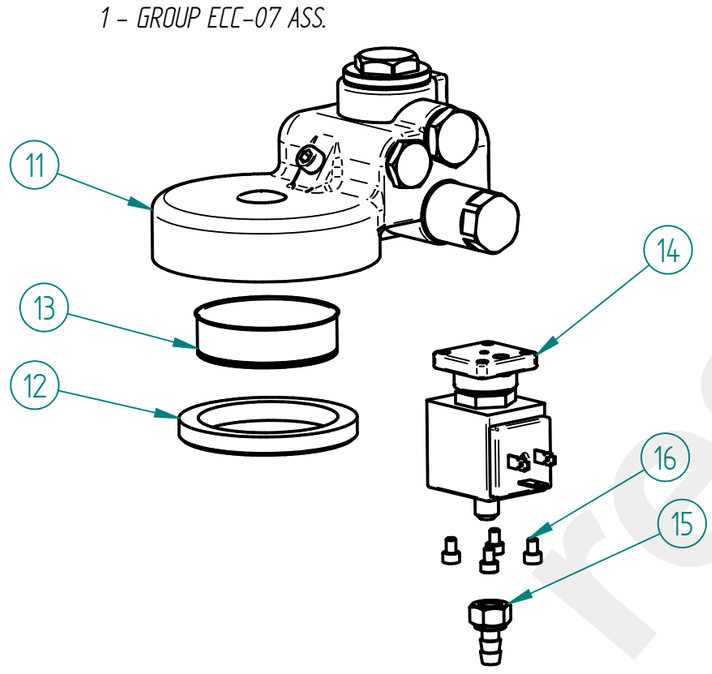

ITEM Nº	CÓDIGO	DESIGNAÇÃO	DESIGNATION	QUANT.
11	4.0.016.0000	GRUPO ECC-07	GROUP ECC-07	1
12	5.0.025.0012	JUNTA PORTA FILTRO 58X74X8,5MM (GR B-61/ECC-07)	FILTER HOLDER GASKET	1
13	5.0.025.0010	CRIVO GRUPO B-61/ECC-07	GROUP B-61 SIEVE	1
14	5.0.000.0123	ELECTROVALVULA 3 VIAS 230V - GRUPO	230V 3 WAY ELECTROVALVE GROUP	1
15	4.0.000.0198	RACORD DESCARGA ELECTROVALVULA	ELECTROVALVE DRAINAGE RACCORD	1
16	4.2.000.9606	PARAF. UMBRACO M4X6 INOX DIN912	M4X6 INOX DIN912 UMBRACO SCREW	4

11 - 4.0.016.0000 - GRUPO ECC-07

11 - GROUP ECC-07

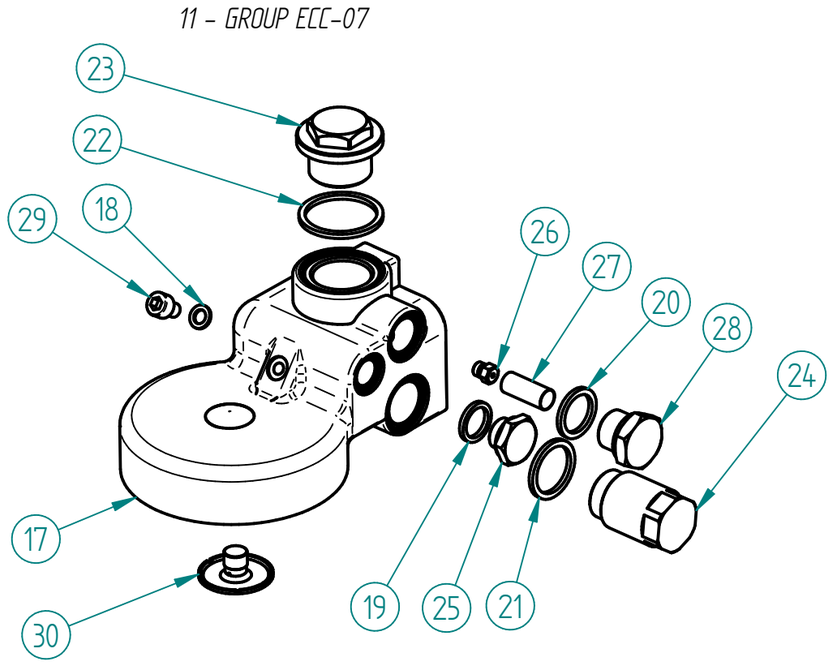

ITEM Nº	CODIGO	DESIGNAÇÃO	DESIGNATION	QUANT.
17	5.0.016.0100	CORPO GRUPO ECC-07	BODY OF THE GROUP ECC-07	1
18	5.0.025.0015	JUNTA TEFLON 10X6X1	TEFLON GASKET	1
19	5.0.000.0315	JUNTA TEFLON 18X13,5X2MM	TEFLON GASKET	1
20	5.0.025.0022	JUNTA TEFLON 22X17X2	TEFLON GASKET	1
21	5.0.016.0106	JUNTA TEFLON 26X 21X2	TEFLON GASKET	1
22	5.0.025.0002	JUNTA TEFLON 35X30X2	TEFLON GASKET	1
23	5.0.016.0102	TAMPAO SUPERIOR M26X1,5 CROM. GR ECC-07	UPPER CHROM. COVER M26X1,5 (GR ECC-07)	1
24	5.0.016.0105	INFUSOR GRUPO ECC-07	INFUSER OF GROUP ECC-07	1
25	5.0.016.0104	TAMPAO LATERAL G1/4 CROM. GR ECC-07	CHROM. SIDE COVER G1/4 (GR ECC-07)	1
26	5.0.016.0110	INJECTOR 0.7 M6X0,75 (GR ECC-07)	INJECTOR 0,7 M6X0,75 (GR ECC-07)	1
27	5.0.025.0023	FITRO INOX INJECTOR	GROUP GIGLEUR FILTER	1
28	5.0.025.0021	TAMPAO G3/8 CROM. (GR B-61/GR EC-07)	CHROM. COVER G3/8 (GR B-61/GR ECC-07)	1
29	5.0.025.0003	PARAFUSO UMBRACO M6X10 INOX (GR B-61/ECC-07)	FRONT INOX SCREW M6X10 OF THE GROUP B-61	1
30	5.0.025.0009	DISTRIBUIDOR GRUPO B-61/ECC-07	OUTLET GROUP B-61/ECC-07	1

restoranu

MÁQ. CAFÉ CARAVEL 1 / 1 TC RESTYLE

ESPRESSO COFFEE MACHINE CARAVEL 1 / 1 TC RESTYLE

MÁQUINAS GRUPOS BAIXOS / LOW CUPS MACHINES

14 – PAINEL FRONTAL CONJ. CARAVEL 1

14 – FRONT PANEL CARAVEL 1

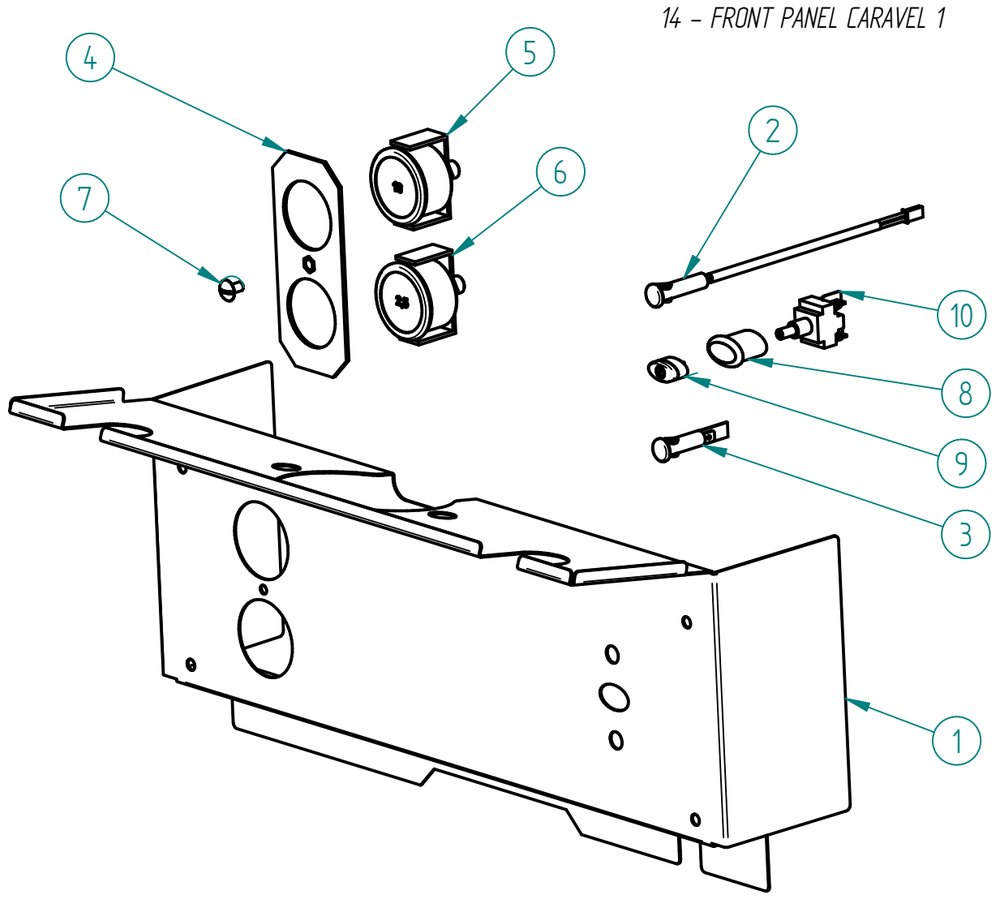

ITEM Nº	CÓDIGO	DESIGNAÇÃO	DESIGNATION	QUANT.
1	7.0.016.7002-A	PAINEL FRONTAL C/ LED CARAVEL 1	FRONT PANEL W/ LED CARAVEL 1	1
2	5.0.000.1061	SINALIZADOR LED VERMELHO Φ10MM 1400MM	RED LED Φ10MM	1
3	4.0.025.0135	SINALIZADOR LARANJA Φ10MM TERM. MACHO	ORANGE LED Φ10MM	1
4	7.0.016.0204	SUPORTE MANÓMETROS ATLANTIC	ATLANTIC GAUGE SUPPORT	1
5	5.0.000.0391	MANOMETRO 0-16BAR	PRESSURE GAUGE 0-16BAR	1
6	5.0.000.0392	MANOMETRO 0-2,5BAR	PRESSURE GAUGE 0-2,5BAR	1
7	4.2.000.9116	PARAFUSO CAB. OVAL LARGA M5X10 NIQ	SCREW M5X10	1
8	4.0.000.0503	CAIXA ELIPSE D16	BOX D16 ELIPSE	1
9	4.0.000.0526	TASTO ELIPSE D16 ON/OFF	SWITCH KEY D16 ON/OFF	1
10	4.0.000.0513	INTERRUPTOR BIPOLAR E0070	TWO POLES SWITCH E0070	1

MÁQUINAS GRUPOS ALTOS / TALL CUPS MACHINES

14 – PAINEL FRONTAL CONJ. CARAVEL 1 TC

14 – FRONT PANEL CARAVEL 1 TC

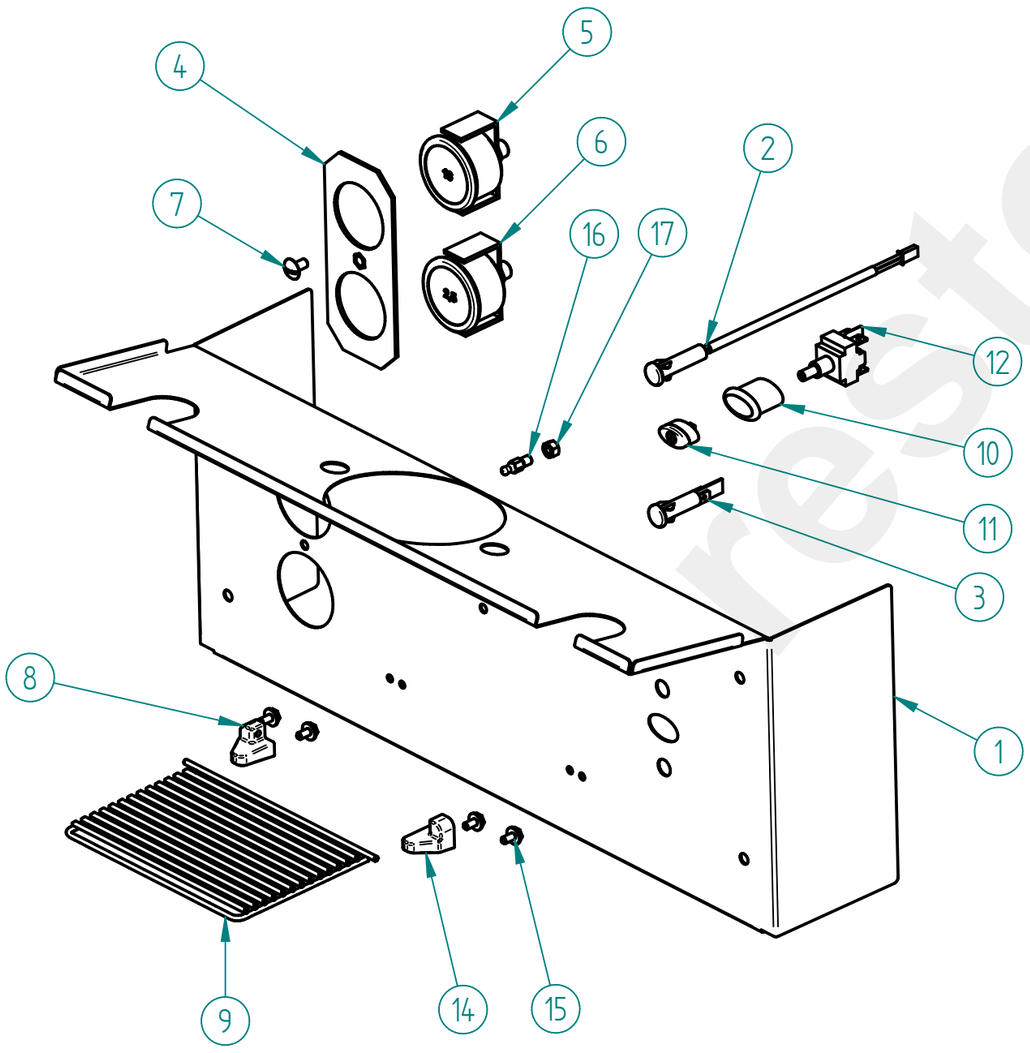

ITEM Nº	CÓDIGO	DESIGNAÇÃO	DESIGNATION	QUANT.
1	7.0.016.7203-B	PAINEL FRONTAL GRELHA ARAME C/ LED CARAVEL 1 TC	FRONT PANEL CARAVEL 1 TC	1
2	5.0.000.1061	SINALIZADOR LED VERMELHO Φ10MM 1400MM	RED LED Φ10MM	1
3	4.0.025.0135	SINALIZADOR LARANJA Φ10MM TERM. MACHO	ORANGE LED Φ10MM	1
4	7.0.016.0204	SUPORTE MANÓMETROS ATLANTIC	ATLANTIC GAUGE SUPPORT	1
5	5.0.000.0391	MANOMETRO 0-16BAR	PRESSURE GAUGE 0-16BAR	1
6	5.0.000.0392	MANOMETRO 0-2,5BAR	PRESSURE GAUGE 0-2,5BAR	1
7	4.2.000.9116	PARAFUSO CAB. OVAL LARGA M5X10 NIQ	SCREW M5X10	1
8	4.0.016.7018	SUPORTE ESQUERDO GRELHA CHAVENAS ARAME	WIRE CUP LEFT SUPPORT	1
9	4.0.016.7015	GRELHA CHAVENAS ARAME CARAVEL/COMPASS/QUADRANT	WIRE COFFEE TRAY GRID	1
10	4.0.000.0503	CAIXA ELIPSE D16	BOX D16 ELIPSE	1
11	4.0.000.0526	TASTO ELIPSE D16 ON/OFF	SWITCH KEY D16 ON/OFF	1
12	4.0.000.0513	INTERRUPTOR BIPOLAR E0070	TWO POLES SWITCH E0070	1
14	4.0.016.7017	SUPORTE DIREITO GRELHA CHAVENAS ARAME	WIRE CUP RIGHT SUPPORT	1
15	4.2.000.9126	PARAFUSO ROSCA PLASTICO K40X8 ZINC.	SCREW K40X8	4
16	4.0.016.7020	FIXADOR GRELHA CHAVENAS ARAME	FIXER PIN	1
17	4.2.000.9172	PORCA M5 ZINC. DIN934	M5 NUT ZINC. DIN934	1

OPCIONAL: (LEDS)

CÓDIGO	DESIGNAÇÃO	DESIGNATION	QUANT.
4.0.007.0040	LED BRANCO Φ16MM 0,36W 12V	WHITE LED LIGHT ⌀16MM 0,36W 12V	2
4.0.007.0044	CABO LED BRANCO Φ16MM LIGADOR	WHITE LED CABLE Φ16MM TERMINAL BLOCK	2
4.0.000.0949	TRANSFORMADOR 240VAC/12VDC	TRANSFORMER 240VAC/12VDC	1
4.0.016.5065	CABO TRANSFORMADOR 240VAC/12VDC LEDS CARAVEL	CABLE TRANSFORMER 240VAC/12VDC LEDS	1
4.2.000.9256	SHUNT RAPIDO 3 CONTACTOS	FAST LINKER	4

Management System ISO 9001:2015
TÜVRheinland CERTIFIED
www.tuv.com ID 9108624282

www.fiamma.pt

This drawing may be altered without previous notice.
Os elementos deste desenho podem ser alterados sem aviso prévio.

MÁQ. CAFÉ CARAVEL 1 / 1 TC RESTYLE

ESPRESSO COFFEE MACHINE CARAVEL 1 / 1 TC RESTYLE

21 - 7.0.016.0065 - BLOCO ENTRADA AGUA ECC-07 (AUT.) CONJ.

21 - WATER INLET ASS.

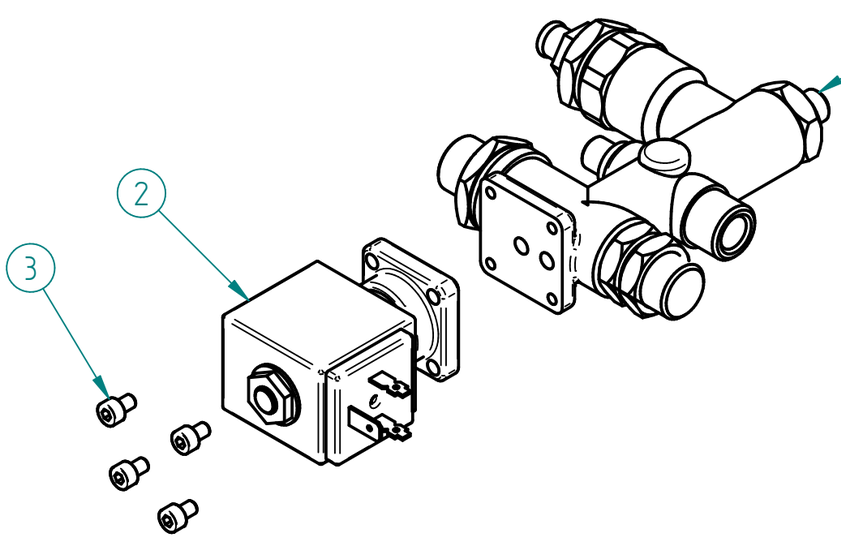

ITEM Nº	CÓDIGO	DESIGNAÇÃO	DESIGNATION	QUANT.
1	4.0.016.0010	BLOCO ENTRADA AGUA ECC-07 (AUT.)	WATER INLET ASS.	1
2	5.0.000.0124	ELECTROVAL. 2 VIAS 230V/50HZ-ENT. AGUA PARAL.	2 WAYS ELECTROVALVE	1
3	4.2.000.9606	PARAF. UMBRACO M4X6 INOX DIN912	M4X6 INOX DIN912 UMBRACO SCREW	4

1 - 4.0.016.0010 - BLOCO ENTRADA AGUA ECC-07 (AUT.)

1 - WATER INLET ASS.

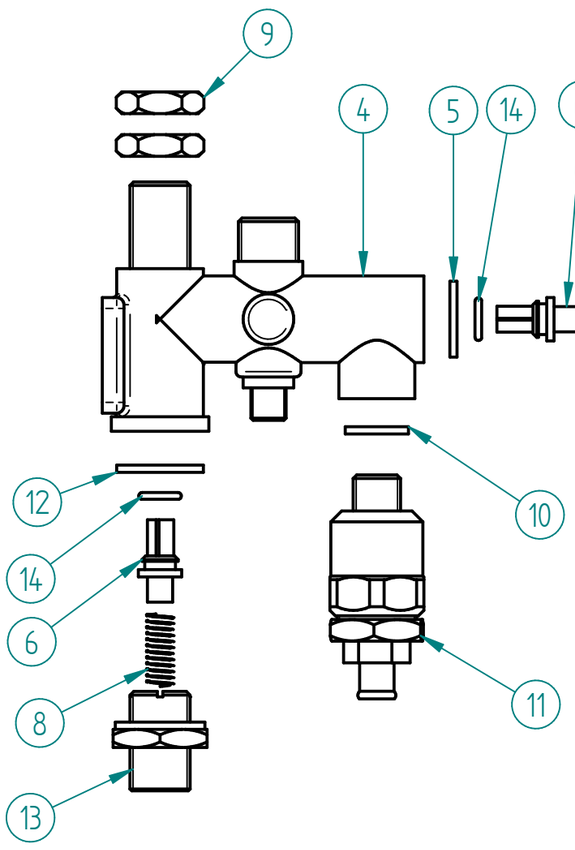

ITEM Nº	CODIGO	DESIGNAÇÃO	DESIGNATION	QUANT.
4	5.0.016.0200	CORPO BLOCO AUT. ECC-07	DISTRIBUTION GROUP BODY (AUT. ECC-07)	1
5	5.0.025.1386	JUNTA TEFLON 21X16,8X2	TEFLON GASKET	1
6	5.0.016.0231	VALVULA ANTI-RETORNO BLOCO ECC-07	ANTI-BACKFLOW VALVE	2
7	5.0.016.0235	RACORD G3-8 x G1-8 BLOCO ECC-07	RACORD G3/8XG1/8 (DISTRIB. GROUP ECC-07)	1
8	5.0.016.0234	MOLA VALVULA ANTI-RETORNO BLOCO ECC-07	ANTI-BACKFLOW VALVE SPRING	2
9	4.0.000.0045	PORCA G3/8 LATAO (SEXT. 21MM)	BRASS NUT G3/8 (21MM)	2
10	5.0.000.0315	JUNTA TEFLON 18X13,5X2MM	TEFLON GASKET	1
11	5.0.016.0220	VALVULA EXPANSAO BLOCO ECC-07	EXPANSION VALVE (DISTRIB. GROUP ECC-07)	1
12	5.0.016.0211	JUNTA TEFLON 24X19X2	TEFLON GASKET	1
13	5.0.016.0215	RACORD M20x1,5-G3/8 BLOCO ECC-07	RACORD M20X1,5-G3/8	1
14	5.0.000.0506	ORING 8X1,9MM VITON	O-RING 8X1,9 VITON	2

8 - 5.0.016.0220 -VALVULA EXPANSÃO BLOCO ECC-07

8 - EXPANSION VALVE (DISTIB. GROUP ECC-07)

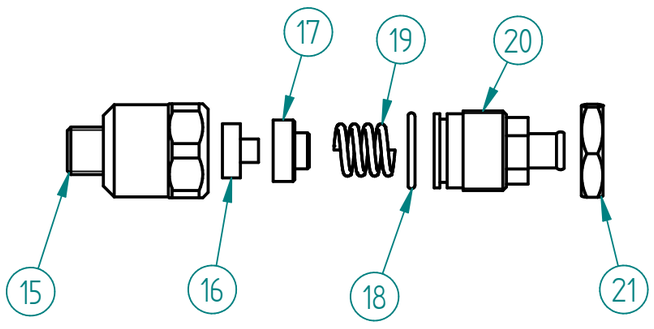

ITEM Nº	CODIGO	DESIGNAÇÃO	DESIGNATION	QUANT.
15	5.0.016.0222	CORPO VALVULA EXPAN. BLOCO ECC-07	EXPANSION VALVE BODY	1
16	5.0.016.0223	JUNTA VALVULA EXPAN. BLOCO ECC-07	EXPANSION VALVE GASKET	1
17	5.0.016.0224	SUPORTE JUNTA BLOCO ECC-07	GASKET HOLDER (DISTRIB. GROUP ECC-07)	1
18	5.0.016.0225	ORING 21X17X2	ORING 21X17X2	1
19	5.0.016.0214	MOLA 8-16KG BLOCO ECC-07	SPRING	1
20	5.0.016.0226	RACORD M22X1 VALVULA EXPAN. BLOCO ECC-07	RACORD M22X1- EXPANSION VALV.	1
21	5.0.016.0227	PORCA M22X1 LATAO	BRASS NUT M22X1	1

restoranu.eu

MÁQ. CAFÉ CARAVEL 1 / 1 TC RESTYLE

ESPRESSO COFFEE MACHINE CARAVEL 1 / 1 TC RESTYLE

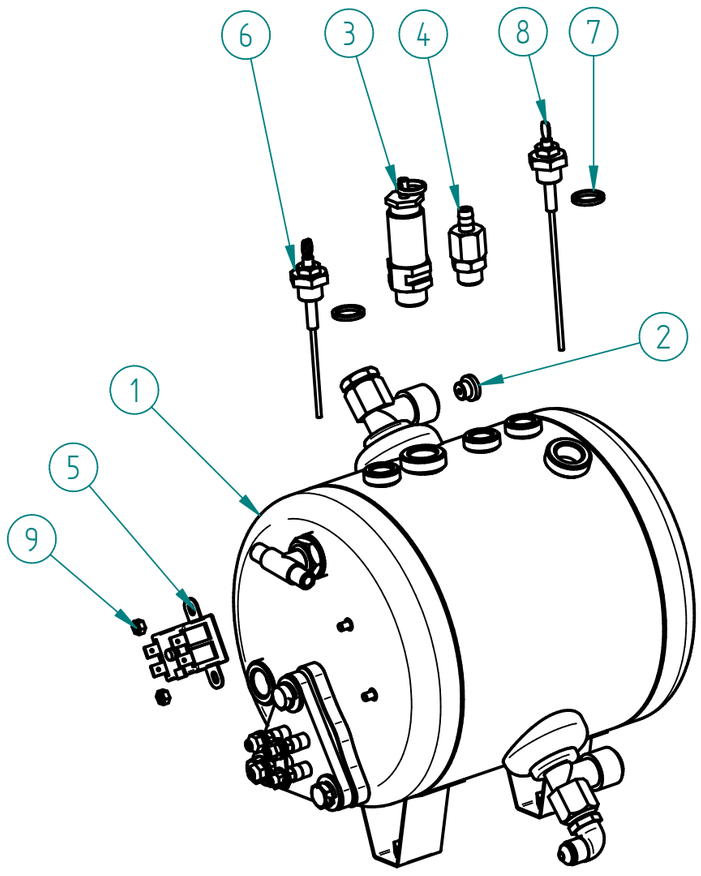

25 – CALDEIRA 5LT C/ ACESSORIOS

25 – 5LT BOILER W/ ACESS

ITEM Nº	CÓDIGO	DESIGNAÇÃO	DESIGNATION	QUANT.
1	7.0.000.0509	CALDEIRA 1 GR 5 LT C/ ACESS.	1 GROUP 5LT BOILER W/ ACESS.	1
2	5.0.000.0748	REDUTOR CAUDAL 2,5MM	FLOW REDUCER 2,5MM	1
3	4.0.000.0051	VALVULA SEGURANÇA CALDEIRA	BOILER SECURITY VALVE	1
4	5.0.000.1002	VALVULA ANTI-VACUO	ANTI VACUUM VALVE	1
5	4.0.000.0250	TERMOSTATO SEGURANÇA 130º	SAFETY THERMOSTAT 130º	1
6	7.0.016.0070	SONDA ⌀2,5X105MM CONJ.	⌀2,5X105MM PROBE ASS.	1
7	5.0.000.0315	JUNTA TEFLON 18X13,5X2MM	TEFLON GASKET	2
8	7.0.025.0002	SONDA ⌀2,5X135MM CONJ.	⌀2,5X135MM PROBE ASS.	1
9	4.2.000.9184	PORCA M4 LATAO DIN934	BRASS M4 NUT DIN934	2

1 – 7.0.000.0509 – CALDEIRA 1GR 5LT C/ ACESS.

1 – 1 GROUP 5LT BOILER W/ ACESS.

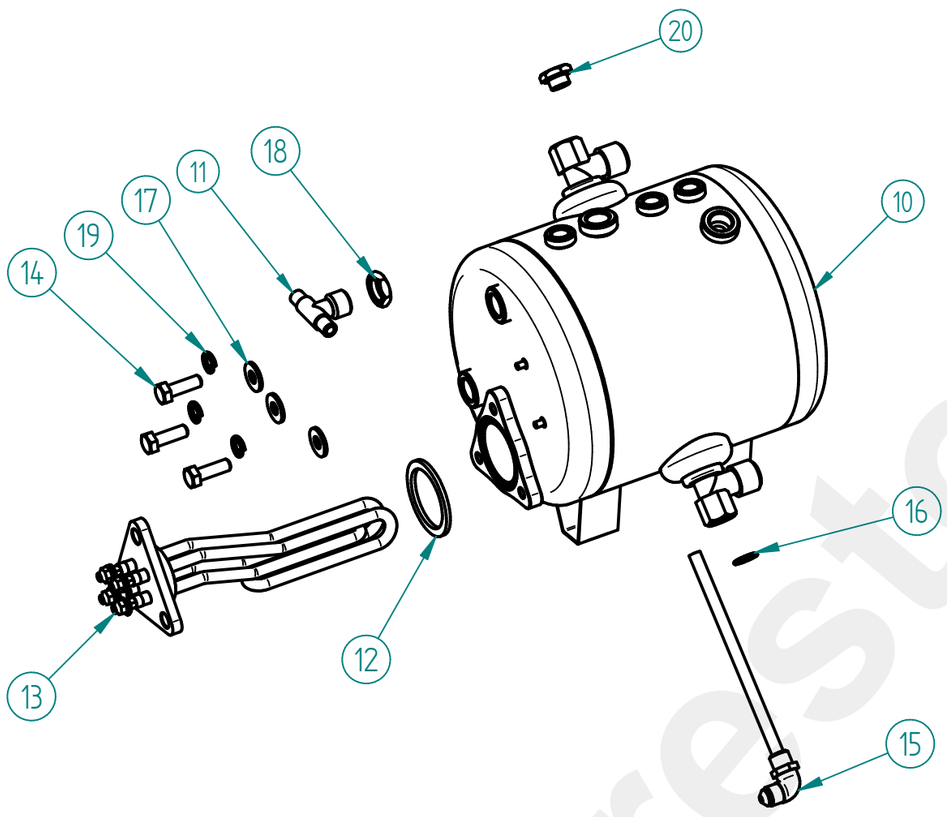

ITEM Nº	CÓDIGO	DESIGNAÇÃO	DESIGNATION	QUANT.
10	7.0.000.0542	CALDEIRA 1 GR 5 LT (RACORD SOLDADO)	1 GROUP 5LT BOILER	1
11	4.0.000.0071	RACORD DUPLO G3/8-2XG1/8	DOUBLE RACCORD	1
12	5.0.000.0307	JUNTA RESISTENCIA REDONDA	HEATING ELEMENT GASKET	1
13	4.0.000.0214	RESISTENCIA TRIANGULAR 1800W 1GR	TRIANGULAR HEATING ELEMENT (1800W)	1
14	4.2.000.9086	PARAFUSO CAB. SEXT. M8X25 ZINC. DIN933	SCREW M8X25	3
15	7.0.000.0120	RACORD INJECTOR C/ TUBO	INJECTION RACORD W/ TUBE	1
16	4.0.000.0013	ANILHA 13x17MM (G1/4) COBRE	GASKET G1/4 CU	1
17	7.2.000.0015	ANILHA PLANA 2X20X8,5 ZINC.	FLAT RING 2X20X8.5	3
18	4.0.000.0045	PORCA G3/8 LATAO (SEXT. 21MM)	BRASS NUT G3/8 (21MM)	1
19	4.2.000.9147	ANILHA MOLA M8 ZINC. DIN127B	M8 SPRING WASHER	3
20	4.0.000.0151	TAMPAO G1/4 LATAO	BRASS COVER G1/4	1

32 – 7.0.016.0062 – MOTOR BOMBA CONJ. RPM 150W

32- PUMP-MOTOR ASS. RPM 150W

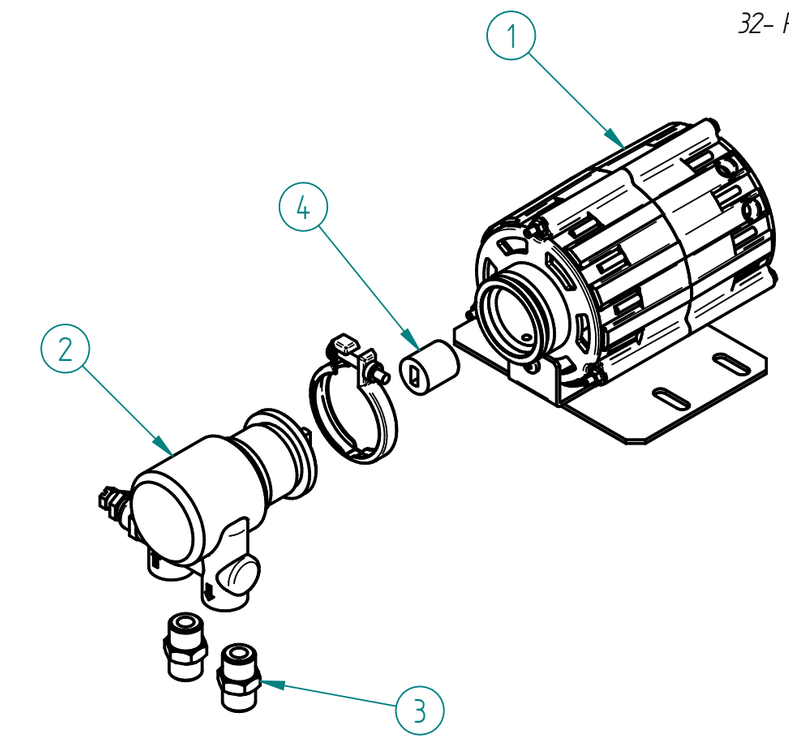

ITEM Nº	CÓDIGO	DESIGNAÇÃO	DESIGNATION	QUANT.
1	5.0.000.0476	MOTOR RPM 230V/50HZ 150W P/ ACOPLAMENTO	MOTOR RPM 230V/50HZ 150W W/ COUPLING	1
2	5.0.000.0040	BOMBA AGUA	WATER PUMP	1
3	4.0.000.0115	RACORD G3/8-G3/8 (BOMBA)	PUMP'S METAL SLEEVE	2
4	5.0.000.0474	ACOPLAMENTO MOTOR/BOMBA	MOTOR/PUMP COUPLING	1

restoranu.eu

R00

ESQUEMA ELECTRICO

Electric Scheme

MÁQ. CAFÉ CARAVEL 1 / 1 TC RESTYLE

ESPRESSO COFFEE MACHINE CARAVEL 1 / 1 TC RESTYLE

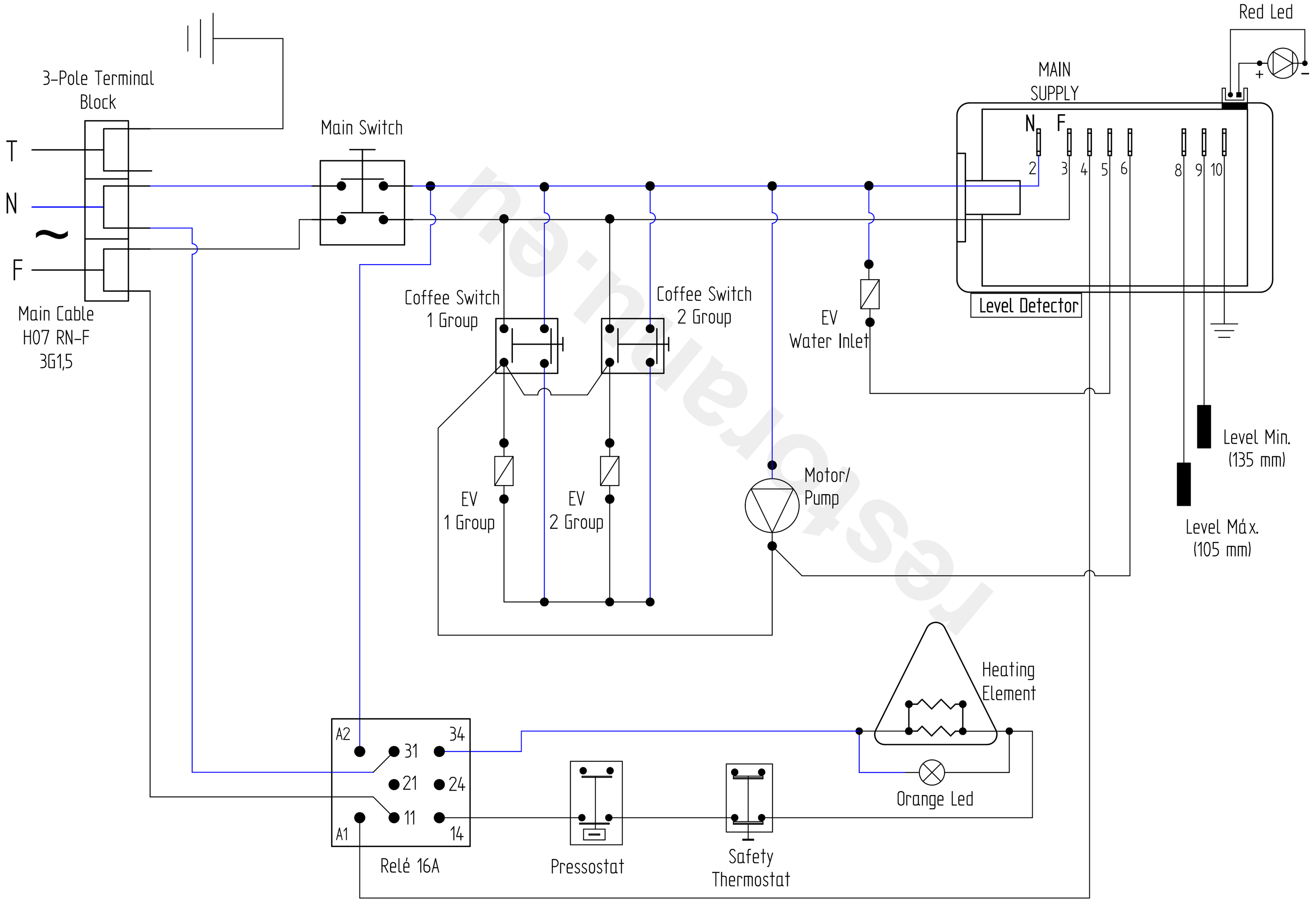

This drawing may be altered without previous notice.
Os elementos deste desenho podem ser alterados sem aviso prévio.

www.fiamma.pt

fiamma LT
Management System ISO 9001:2015
TÜVRheinland CERTIFIED
www.tuv.com ID 9108624282
MB „Restoranų įranga" · Vito Gerulaičio 1-59, LT-08200 Vilnius · +370 614 89888 · info@restoranu.eu · www.restoranu.eu