SINCE 1977

R00

Explosion Drawing
Desenho de Explosão



CARAVEL 3 CV RESTYLE / CARAVEL 3 CV TC RESTYLE

ESPRESSO COFFEE MACHINE • MÁQUINA CAFÉ ESPRESSO

CARAVEL 3 CV WHITE RESTYLE - 2.0.018.9003
CARAVEL 3 CV RESTYLE - 2.0.018.9004
CARAVEL 3 CV TI RESTYLE - 2.0.018.9005

CARAVEL 3 CV TC WHITE RESTYLE - 2.0.018.9013
CARAVEL 3 CV TC RESTYLE - 2.0.018.9014
CARAVEL 3 CV TI TC RESTYLE - 2.0.018.9015

restoranu.eu

20210317

www.fiamma.pt

This drawing may be altered without previous notice.
Os elementos deste desenho podem ser alterados sem aviso prévio.

MÁQ. CAFÉ CARAVEL 3 CV / 3 CV TC RESTYLE

ESPRESSO COFFEE MACHINE CARAVEL 3 CV / 3 CV TC RESTYLE

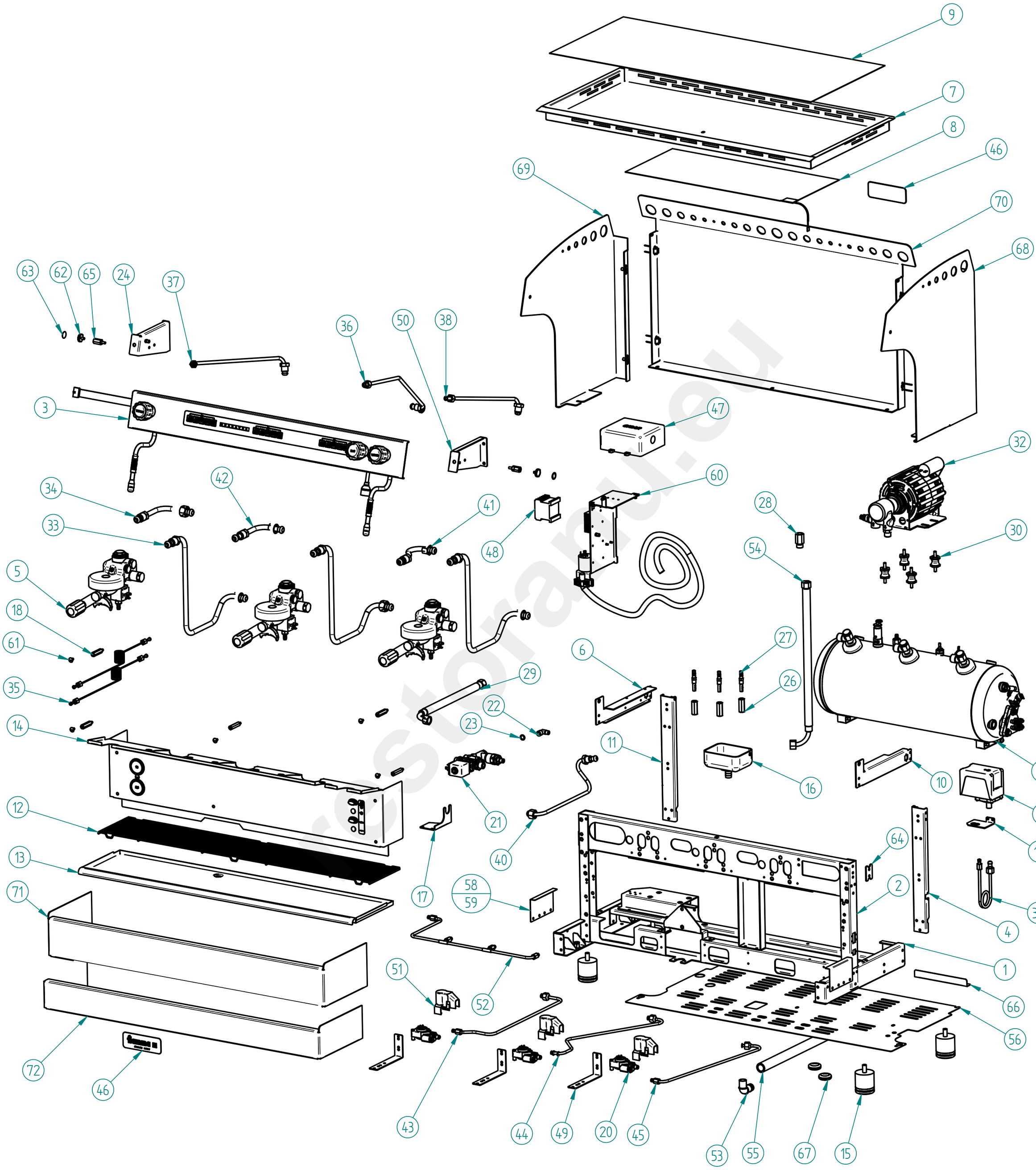

restoranu.eu

MÁQ. CAFÉ CARAVEL 3 CV / 3 CV TC RESTYLE - 2.0.018.9004 / 2.0.018.9014

ESPRESSO COFFEE MACHINE CARAVEL 3 CV / 3 CV TC RESTYLE

fiamma
RST
TÜVRheinland CERTIFIED Management System ISO 9001:2015 www.tuv.com ID 9108624282

www.fiamma.pt

This drawing may be altered without previous notice.
Os elementos deste desenho podem ser alterados sem aviso prévio.

MÁQ. CAFÉ CARAVEL 3 CV / 3 CV TC RESTYLE

ESPRESSO COFFEE MACHINE CARAVEL 3 CV / 3 CV TC RESTYLE

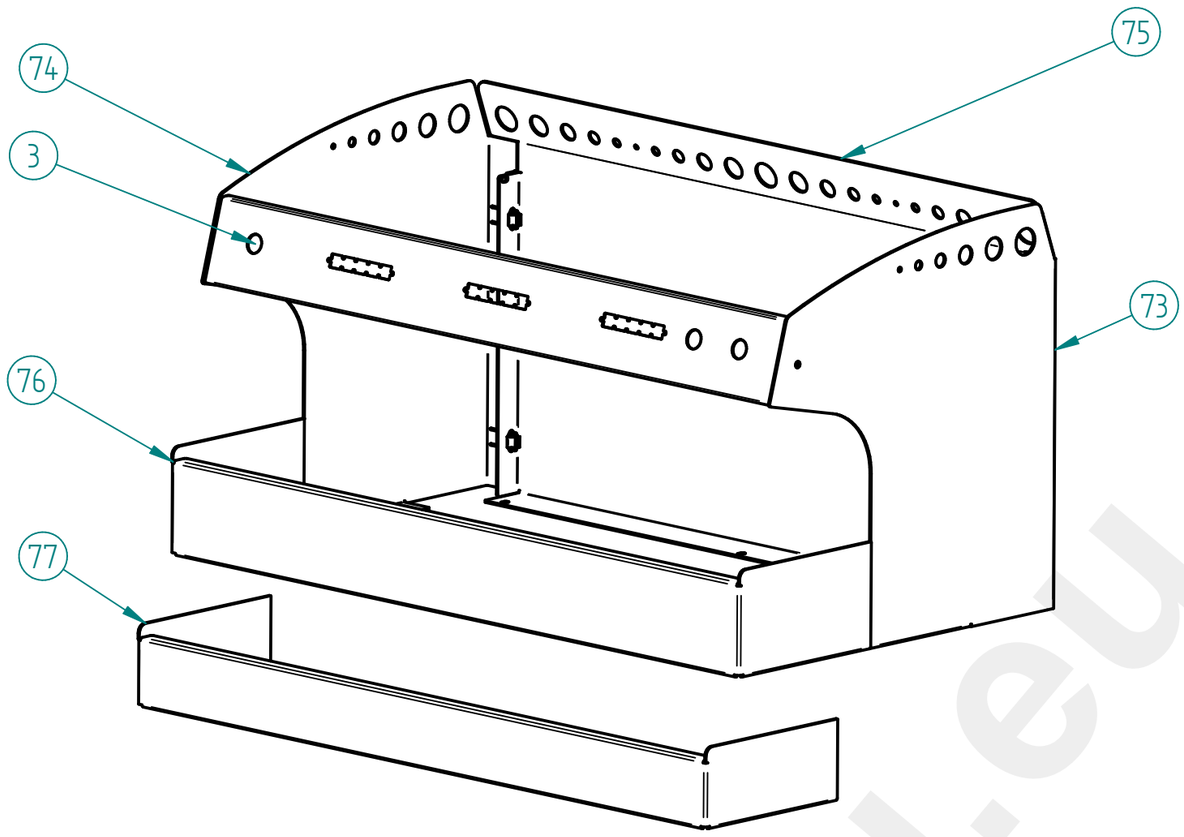

MÁQ. CAFÉ CARAVEL 3 CV WHITE / 3 CV TC WHITE RESTYLE - 2.0.018.9003 / 2.0.018.9013

ESPRESSO COFFEE MACHINE CARAVEL 3 CV WHITE / 3 CV TC WHITE RESTYLE

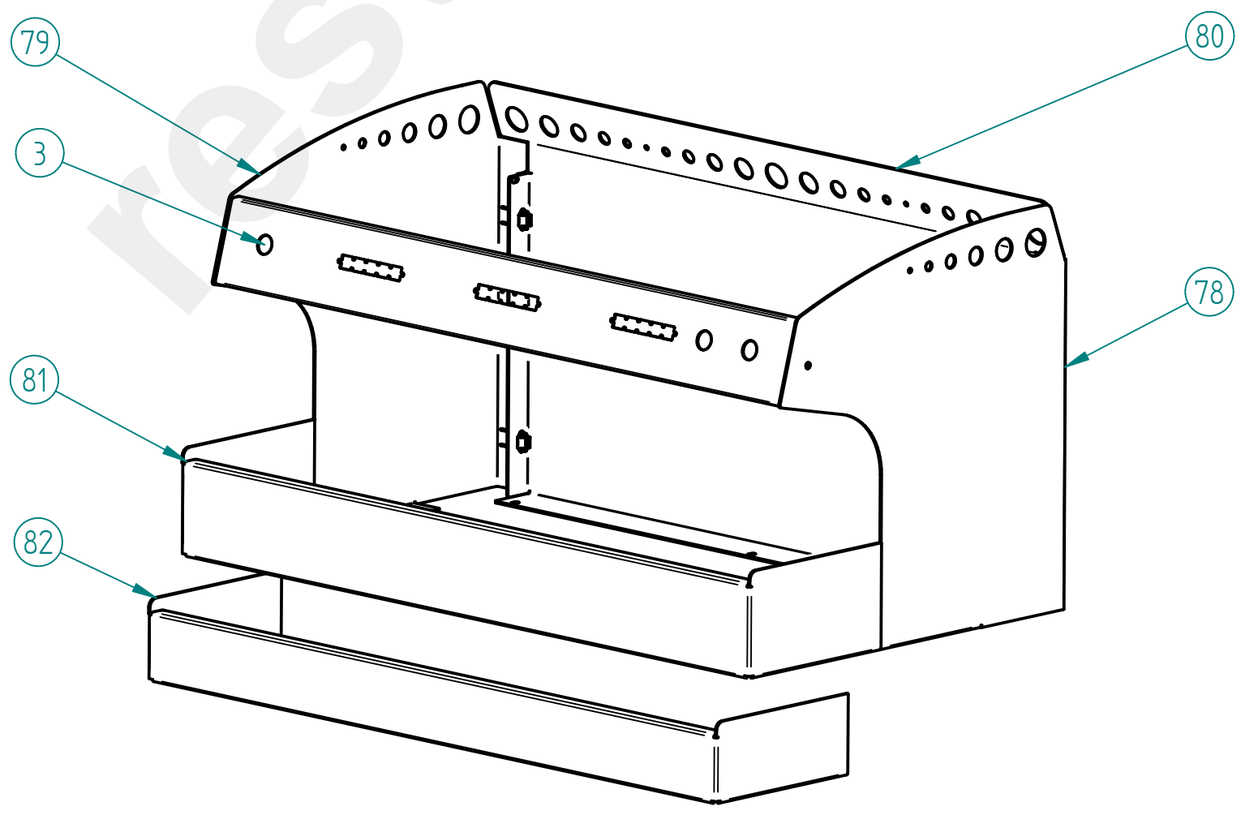

MÁQ. CAFÉ CARAVEL 3 CV TI / 3 CV TI TC RESTYLE - 2.0.018.9005 / 2.0.018.9015

ESPRESSO COFFEE MACHINE CARAVEL 3 CV TI / 3 CV TI TC RESTYLE

restoranu.eu

MÁQ. CAFÉ CARAVEL 3 CV / 3 CV TC RESTYLE

ESPRESSO COFFEE MACHINE CARAVEL 3 CV / 3 CV TC RESTYLE

LISTA DE COMPONENTES E ACESSÓRIOS
Spare parts list

ITEM Nº	CÓDIGO	DESIGNAÇÃO	DESIGNATION	QUANT.
1	7.0.018.5511	CHASSI HORIZONTAL ATLANTIC 3 ECC	HORIZONTAL CHASSIS ATLANTIC 3 ECC	1
2	7.0.018.5512	CHASSI VERTICAL ATLANTIC 3 ECC	VERTICAL CHASSIS ATLANTIC 3 ECC	1
3	PRE-MONTAGEM	PM_PAINEL COMANDO SUPERIOR CONJ. CARAVEL 3 CV RESTYLE	UPPER COMMAND PANEL ASS. CARAVEL 3 CV	1
4	7.0.016.1055	CANTO POSTERIOR DIR. ATLANTIC NV	RIGHT REAR SUPPORT ATLANTIC NV	1
5		GRUPO ECC-07 C/ ACESSORIOS	ECC-07 GROUP W/ ACESS.	3
6	7.0.016.1542	REFORÇO LATERAL SUP. ESQ. ATLANTIC REBIT	LEFT SIDE PANEL SUPPORT	1
7	7.0.018.5215	TABULEIRO SUPERIOR ATLANTIC 3 ECC	UPPER TRAY ATLANTIC 3 ECC	1
8	5.0.000.0809	RESIST. ESCALDA CHAV. 530X230MM 75W 230V	HEATING ELEMENT FOR CUP HEATING	1
9	7.0.008.0089	GRELHA REDE 830X360	WIRE MESH GRID 830X360	1
10	7.0.016.1540	REFORÇO LATERAL SUP. DIR. ATLANTIC REBIT	RIGHT SIDE PANEL SUPPORT	1
11	7.0.016.1054	CANTO POSTERIOR ESQ. ATLANTIC NV	LEFT REAR SUPPORT ATLANTIC NV	1
12	4.0.018.7010	GRELHA TABULEIRO INF. ARAME CARAVEL 3	WIRE TRAY GRID CARAVEL 3	1
13	7.0.018.5222	TABULEIRO INFERIOR ATLANTIC 3 ECC	LOWER TRAY ATLANTIC 3 ECC	1
14	PRE-MONTAGEM	PM_PAINEL FRONTAL CONJ. CARAVEL 3 CV	FRONT PANEL CARAVEL 3 CV	1
15	4.0.000.0803	PE MAQ. DE CAFE 50x50	FEET FOR COFFE MACHINE 50X50	4
16	4.0.000.0840	DEPOSITO ESGOTO PLASTICO	DRAIN TRAY	1
17	7.0.016.5050	SUPORTE BLOCO ATLANTIC ECC	DISTRIBUTION GROUP SUPPORT ATLANTIC ECC	1
18	4.0.028.0070	SEPARADOR BLINDAGEM ELECTROV. GRUPOS	SHIELD GROUP SEPARATOR	5
19	7.0.016.1060	SUPORTE PRESSOSTATO MAQ. CAFE	PRESSURE SWITCH SUPPORT	1
20	PRE-MONTAGEM	CONTADOR VOLUMETRICO CONJ. MÁQ. CAFE 2GR / 3GR	ASS. VOLUMETRIC DOSER 2/3CV	3
21	7.0.016.0065	BLOCO ENTRADA AGUA ECC-07 (AUT.) CONJ.	WATER INLET ASS.	1
22	5.0.000.0728	RACORD L G1/8-G1/8F	RACORD L G1/8-G1/8F	1
23	5.0.025.3193	ANILHA 10X15MM (G1/8) COBRE	COPPER WASHER 10X15MM (G1/8)	1
24	7.0.016.5145	LATERAL PAINEL COM. SUP. ESQ. ATLANTIC ECC	LEFT SUPPORT UPPER CONTROL PANEL ATLANTIC ECC	1
25		CALDEIRA 18LT C/ ACESSORIOS	18LT BOILER W/ ACESS.	1
26	4.0.000.0190	CAMPANULA DESCARGA GRUPO	OUTER RACORD OF THE DRAINAGE ASSEMBLY	3
27	4.0.000.0195	RACORD CAMPANULA DESCARGA GRUPO	INNER RACORD OF THE DRAINAGE ASSEMBLY	3
28	4.0.000.0040	PORTA FILTRO ENT. AGUA C/ FILTRO NIPLESS	FILTER HOLDER OF WATER INLET	1
29	5.0.000.0912	TUBO LIGAÇAO BOMBA C/ CURVA 330MM	PUMP CONNECTION W/ ELBOW 330MM	1
30	4.0.000.0032	APOIO MOTOR	MOTOR SUPPORT	4
31	5.0.000.0680	PRESSOSTATO 30A/400V 0,5-1,4BAR	PRESSURE SWITCH 30A/400V 0,5-1,4BAR	1
32	7.0.007.0124	MOTOR GR. BOMBA CONJ.	PUMP MOTOR GR. ASS.	1
33	5.0.000.0947	TUBO INFEROR CARTUCHO GRUPO 12mm	LOWER TUBE CARTRIDGE/GROUP 12MM	3
34	5.0.000.0943	TUBO SUP. CART. 3ºGR (ESQ) CARAVEL/QUADRANT 3	TUBE CARTRIDGE/GROUP	1
35	7.0.000.0022	TUBO CAPILAR 1,27X2,5X1000	CAPILLARY TUBE	2
36	7.0.000.0041	TUBO CALDEIRA TORN. AGUA ATLANTIC	TUBE BOILER/WATER TAP	1
37	7.0.000.0070	TUBO CALDEIRA TORN. VAPOR ESQ. QUADRANT	TUBE BOILER/LEFT STEAM TAP QUADRANT	1
38	7.0.000.0042	TUBO CALDEIRA TORN. VAPOR ESQ. ATLANTIC	TUBE BOILER/LEFT STEAM TAP	1
39	7.0.000.0051	TUBO CALDEIRA PRESSOSTATO REVOL./ATLANTIC	TUBE BOILER/PRESSURE SWITCH	1
40	7.0.000.0065	TUBO BLOCO CALDEIRA	TUBE DISTRIB. GROUP/BOILER	1
41	7.0.000.0054	TUBO SUP. CART. 1ºGR (DIR.) REVOL.	TUBE CARTRIDGE/GROUP	1
42	5.0.000.0942	TUBO SUP. CART. 2ºGR (CENT) CARAVEL/QUADRANT 3	TUBE CARTRIDGE/GROUP	1

ITEM Nº	CÓDIGO	DESIGNAÇÃO	DESIGNATION	QUANT.
43	7.0.000.0111	TUBO CONT. VOL. INJECTOR ESQ. (2GR/3GR)	TUBE VOL. DOSER/INJECTOR	1
44	7.0.000.0112	TUBO CONT. VOL. INJECTOR DIR./ CENT. (2GR/3GR)	TUBE VOL. DOSER/INJECTOR	1
45	7.0.000.0113	TUBO CONT. VOL. INJESTOR DIR. (1GR/3GR)	TUBE VOL. DOSER/INJECTOR	1
46	7.0.000.0831	ETIQUETA INOX FIAMMA CONJ.	FIAMMA STAINLESS STEEL LABEL	2
47	4.0.000.0953	UNIDADE ELECTRONICA GICAR	ELECTRONIC UNIT	1
48	4.0.091.0003	CONTACTOR 22A-AC1 BOBINE 230V	CONTACTOR 22A-AC1 230V	1
49	7.0.007.0207	SUPORTE CONTADOR VOL. COMPASS MB	VOLUMETRIC DOSER SUPPORT	3
50	7.0.016.5142	LATERAL PAINEL COM. SUP. DIR. ATLANTIC ECC	RIGTH SUPPORT UPPER CONTROL PANEL ATLANTIC ECC	1
51	5.0.000.1013	BLINDAGEM CONTADOR VOLUMETRICO	SHIELD VOLUMETRIC DOSER	3
52	7.0.000.0103	TUBO BLOCO CONT VOL. 3GR	TUBE DISTRIB. GROUP/VOL. DOSER 3GR	1
53	4.0.000.0845	RACORD L DEPOSITO ESGOTO PLASTICO	ANGLE RACORD	1
54	4.0.000.0818	TUBO ALIMENTAÇÃO C/ CURVA 1500MM	WATER INLET PIPE 1500MM	1
55	4.0.000.0222	TUBO ESGOTO	DRAIN TUBE	1
56	7.0.018.5070	BLINDAGEM FUNDO ATLANTIC 3 ECC	BOTTOM SHIELD ATLANTIC 3 ECC	1
58	7.0.016.7023	SUPORTE TABULEIRO INF. CARAVEL	LOWER TRAY SUPPORT CARAVEL	2
59*	7.0.016.5223	SUPORTE TABULEIRO INF. ATLANTIC ECC	LOWER TRAY SUPPORT ATLANTIC ECC	2
60	7.0.034.0101	CABO H07RN-F 5G2,5 - 1,8MT CONJ. MAQ. CAFE 3GR	3GR COFFEE MACHINES CABLE H07RN-F 5G2,5 - 1,8MT	1
61	4.2.000.9116	PARAFUSO CAB. OVAL LARGA M5X10 NIQ	SCREW M5X10	5
62	4.0.016.5054	PARAFUSO PAINEL LAT. ATLANTIC ECC	SCREW SIDE PANEL ATLANTIC ECC	2
63	4.0.016.5056	AUTOCOLANTE PAINEL LAT. ATLANTIC ECC	SIDE PANEL STICKER ATLANTIC ECC	2
64	7.0.016.5519	CHAPA COMPENSAÇÃO CHASSI VERT. ATLANTIC ECC	COMPENSATION PLATE VERT. CHASSIS ATLANTIC ECC	2
65	4.0.016.5052	SEPARADOR PAINEL LAT. ATLANTIC ECC	SIDE PANEL SEPARATOR ATLANTIC ECC	2
66	7.0.007.0270	PROTECÇAO INTERRUPTOR GERAL COMPASS TC	SWTICH PROTETION COMPASS TC	1
67	4.0.000.0372	PASSA FIOS P/ FURO ⌀25MM	WIRE PROTECTION	2
68	7.0.016.7102	PAINEL LATERAL DIR. PINT. BLACK CARAVEL	RIGHT SIDE PANEL BLACK CARAVEL	1
69	7.0.016.7112	PAINEL LATERAL ESQ. PINT. BLACK CARAVEL	LEFT SIDE PANEL BLACK CARAVEL	1
70	7.0.018.7122	PAINEL POSTERIOR PINT. BLACK CARAVEL 3	REAR PANEL CARAVEL 3 - BLACK PAINTED	1
71	7.0.018.7466	PAINEL COMANDO INF. PINT. BLACK CARAVEL 3	LOWER CONTROL PANEL CARAVEL 3 - BLACK PAINTED	1
72	7.0.018.7461	PAINEL COMANDO INF. PINT. BLACK CARAVEL 3 TC	LOWER CONTROL PANEL CARAVEL 3 TC - BLACK PAINTED	1
73	7.0.016.7101	PAINEL LATERAL DIR. PINT. WHITE CARAVEL	RIGHT SIDE PANEL WHITE CARAVEL	1
74	7.0.016.7111	PAINEL LATERAL ESQ. PINT. WHITE CARAVEL	LEFT SIDE PANEL WHITE CARAVEL	1
75	7.0.018.7121	PAINEL POSTERIOR PINT. WHITE CARAVEL 3	REAR PANEL CARAVEL 3 - WHITE PAINTED	1
76	7.0.018.7467	PAINEL COMANDO INF. PINT. WHITE CARAVEL 3	LOWER CONTROL PANEL CARAVEL 3 - WHITE PAINTED	1
77	7.0.018.7462	PAINEL COMANDO INF. PINT. BLACK CARAVEL 3 TC	LOWER CONTROL PANEL CARAVEL 3 TC - BLACK PAINTED	1
78	7.0.016.7405	PAINEL LATERAL DIR. INOX CARAVEL	RIGHT SIDE PANEL CARAVEL - STAINLESS STEEL	1
79	7.0.016.7415	PAINEL LATERAL ESQ. INOX CARAVEL	LEFT SIDE PANEL CARAVEL - STAINLESS STEEL	1
80	7.0.018.7425	PAINEL POSTERIOR INOX CARAVEL 3	REAR PANEL CARAVEL 3 - STAINLESS STEEL	1
81	7.0.018.7459	PAINEL COMANDO INF. CARAVEL 3	LOWER CONTROL PANEL CARAVEL 3	1
82	7.0.018.7457	PAINEL COMANDO INF. CARAVEL 3 TC	LOWER CONTROL PANEL CARAVEL 3 TC	1

restoran.eu

MÁQ. CAFÉ CARAVEL 3 CV / 3 CV TC RESTYLE

ESPRESSO COFFEE MACHINE CARAVEL 3 CV / 3 CV TC RESTYLE

3 – PAINEL COMANDO SUPERIOR CONJ. CARAVEL 3 CV RESTYLE

3 – UPPER COMMAND PANEL ASS. CARAVEL 3 CV RESTYLE

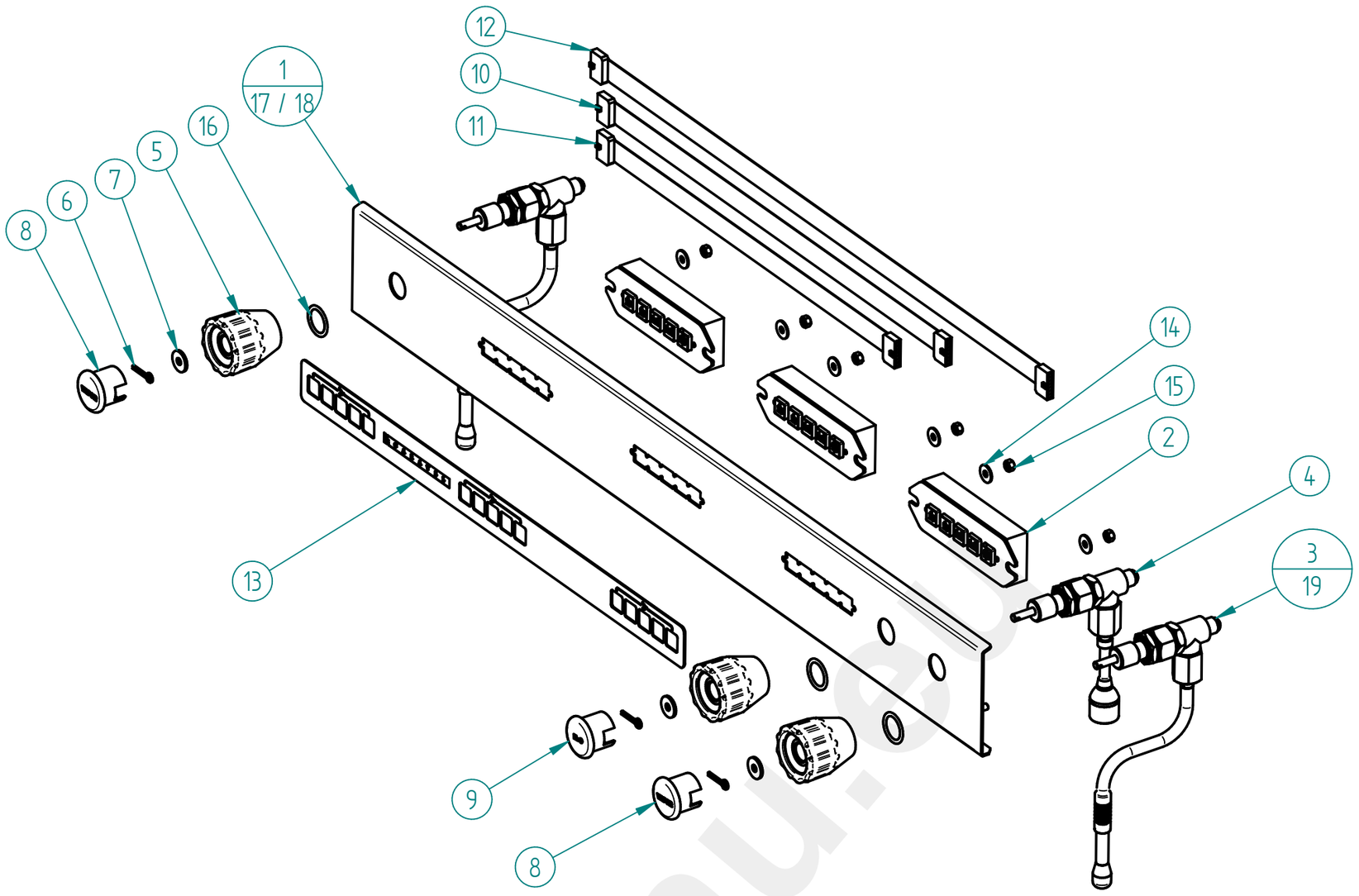

ITEM Nº	CÓDIGO	DESIGNAÇÃO	DESIGNATION	QUANT.
1	7.0.018.7189	PAINEL COMANDO SUP. PINT. BLACK CARAVEL 3 CV	UPPER CONT. PANEL CARAVEL 3 CV – BLACK PAINTED	1
2	7.0.016.7140	TECLADO 5T SQ14 FIAMMA CONJ.	PUSH-BUTTON PANEL 5BTS SQ14 ASSEMB. FIAMMA	3
3	7.0.016.0069	TORNEIRA ECC-07 G1/4-G1/8F (CONJ. VAPOR) LC	STEAM TAP ASS. ECC-07	2
4	4.0.016.0021	TORNEIRA ECC-07 G1/4-G1/8F (CONJ. AGUA)	WATER TAP ASS. ECC-07	1
5	4.0.028.0023	MANIPULO TORNEIRA ECC-07 STAR	TAP HANDLE STAR	3
6	4.0.016.0025	GOLPILHA INOX MAN. TORN. ECC-07	TAP ECC-07 LOCKER	3
7	4.0.016.0024	ANILHA LATAO 2MM MAN. TORN. ECC-07	MS WASHER 2MM	3
8	4.0.016.0027	TAMPAO MAN. TORN. ECC-07 (VAPOR)	ECC-07 TAP HANDLE COVER (STEAM)	2
9	4.0.016.0028	TAMPAO MAN. TORN. ECC-07 (AGUA)	ECC-07 TAP HANDLE COVER (WATER)	1
10	4.0.000.0972	CABO UNIDADE ELECTR. TECLADO 16 PIN 850MM	CABLE FOR ELECTR. UNIT KEYBOARD 16 PIN 850MM	1
11	4.0.000.0971	CABO UNIDADE ELECTR. TECLADO 16 PIN 600MM	CABLE FOR ELECTR. UNIT KEYBOARD 16 PIN 600MM	1
12	4.0.000.0973	CABO UNIDADE ELECTR. TECLADO 16 PIN 1100MM	CABLE FOR ELECTR. UNIT KEYBOARD 16 PIN 1100MM	1
13	7.0.018.7165	PAINEL PERS. INOX CARAVEL 3CV CONJ.	STAINLESS STEEL COSTUM. PANEL CARAVEL 3 CV	1
14	4.2.000.9164	ANILHA PLANA M5X15 ZINC. DIN9021	ZINC-PLATED M5X15 FLAT RING DIN9021	6
15	4.2.000.9172	PORCA M5 ZINC. DIN934	M5 NUT ZINC. DIN934	6
16	4.0.000.0011	ANILHA 20X26MM (G1/2) COBRE	GASKET G1/2 CU	3
17*	7.0.018.7193	PAINEL COMANDO SUP. PINT. WHITE CARAVEL 3 CV	UPPER CONT. PANEL CARAVEL 3 CV – WHITE PAINTED	1
18*	7.0.018.7487	PAINEL COMANDO SUP. CARAVEL 3 CV	UPPER CONTROL PANEL CARAVEL 3 CV	1
19*	4.0.016.0020	TORNEIRA ECC-07 G1/4-G1/8F (CONJ. VAPOR)	STEAM TAP ASS. ECC-07	2

2 – 7.0.016.7140 – TECLADO 5T SQ14 FIAMMA CONJ.

2 – PUSH-BUTTON PANEL 5BTS SQ14 ASSEMB. FIAMMA

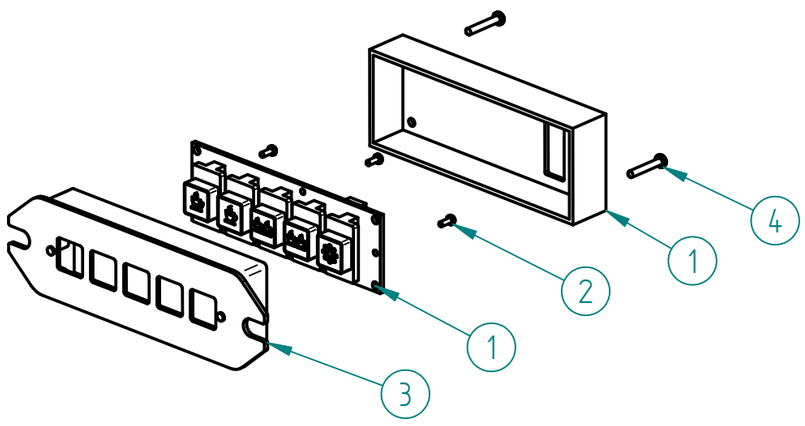

ITEM Nº	CÓDIGO	DESIGNAÇÃO	DESIGNATION	QUANT.
1	4.0.000.0982	TECLADO 5T SQ14 FIAMMA	KEYBOARD 5T SQ14 FIAMMA	1
2	4.2.000.9682	PARAFUSO ROSCA CHAPA B2,2X6,5 ZINC. DIN7981	SHEET METAL SCREW B2,2X6,5 ZINC. DIN7981	3
3	4.0.016.7000	CAIXA 5 TECLAS QUADRADAS	5 SQUARE BUTTONS BOX	1
4	4.2.000.9684	PARAFUSO ROSCA CHAPA B2,9X19 ZINC. DIN7981	SHEET METAL SCREW B2,9X19 ZINC. DIN7981	2

Management System ISO 9001:2015
TÜVRheinland CERTIFIED
www.tuv.com ID 9108624282

www.fiamma.pt

This drawing may be altered without previous notice.
Os elementos deste desenho podem ser alterados sem aviso prévio.

MÁQ. CAFÉ CARAVEL 3 CV / 3 CV TC RESTYLE

ESPRESSO COFFEE MACHINE CARAVEL 3 CV / 3 CV TC RESTYLE

MÁQUINAS GRUPOS BAIXOS / LOW CUPS MACHINES

3 - 7.0.016.0069 - TORNEIRA ECC-07 G1/4-G1/8F (CONJ. VAPOR) LC

3 - STEAM TAP LC ASS. ECC-07

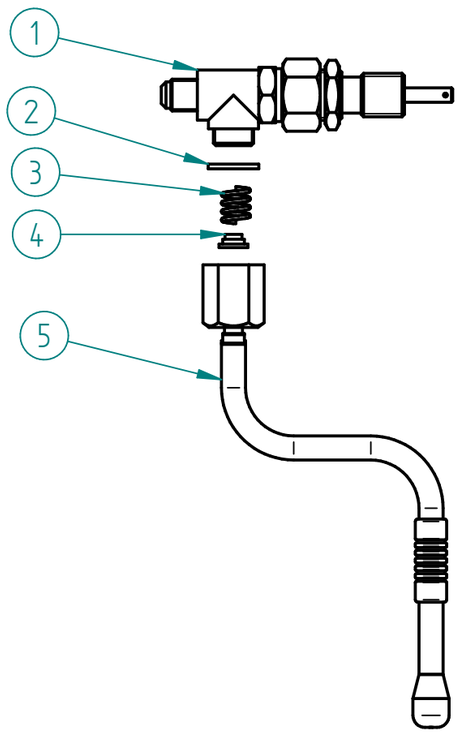

ITEM Nº	CÓDIGO	DESIGNAÇÃO	DESIGNATION	QUANT.
1	5.0.016.0350	TORNEIRA ECC-07 G1/4-G1/8F	TAP ECC-07	1
2	5.0.025.1386	JUNTA TEFLON 21X16,8X2	TEFLON GASKET	1
3	5.0.025.7060	MOLA TUBO AGUA/VAPOR TORN. EVOL.	SPRING TAP	1
4	5.0.025.6508	GUIA MOLA TUBO AGUA/VAPOR TORN. EVOL.	GUIDE BUSH	1
5	5.0.016.7320	TUBO TORNEIRA VAPOR CARAVEL (CONJ.)	STEAM TAP TUBE CARAVEL ASS.	1

OPCIONAL:

3 - 7.0.016.0069 - TORNEIRA ECC-07 G1/4-G1/8F (CONJ. VAPOR) COOL TOUCH LC

3 - STEAM TAP COOL TOUCH LC ASS. ECC-07

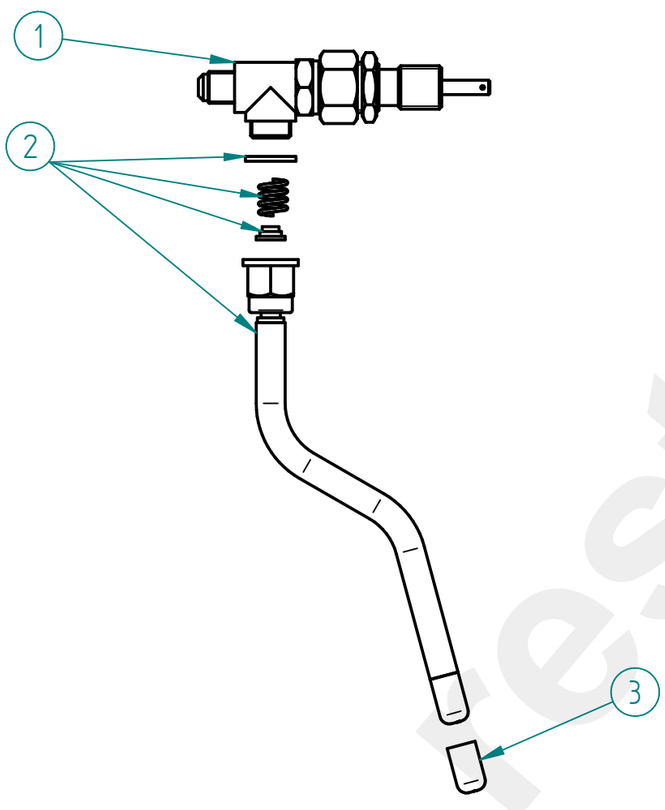

ITEM Nº	CÓDIGO	DESIGNAÇÃO	DESIGNATION	QUANT.
1	5.0.016.0350	TORNEIRA ECC-07 G1/4-G1/8F	TAP ECC-07	1
2	5.0.007.0340	TUBO TORNEIRA VAPOR COOL TOUCH (CONJ.) LOW CUPS	COOL TOUCH STEAM TAP TUBE	1
3	5.0.028.0345	ESPALHADOR VAPOR TORN. COOL TOUCH - 3 FUROS	SPRAYER OF THE COOL TOUCH STEAM TAP - 3 HOLES	1

3 - 7.0.016.0076 -TORNEIRA ALAVANCA G1/4-G3/8 RST (CONJ. VAPOR) LC

3 - STEAM TAP LC ASS. G1/4-G3/8 RST

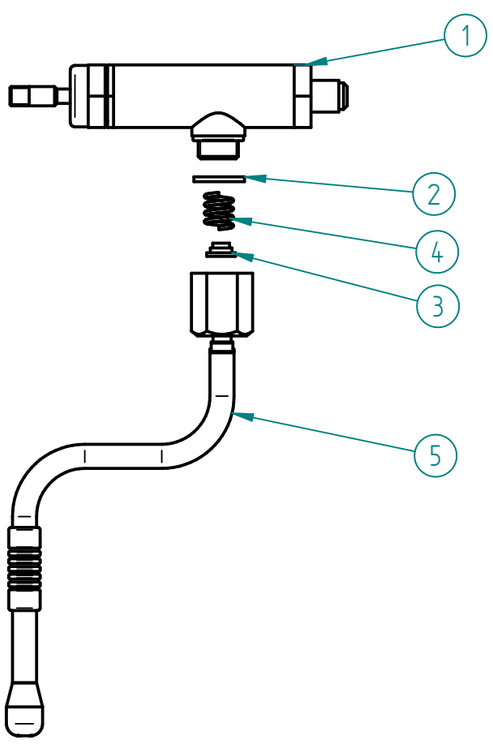

ITEM Nº	CÓDIGO	DESIGNAÇÃO	DESIGNATION	QUANT.
1	5.0.007.0010	TORNEIRA ALAVANCA G1/4-G3/8 RST	LEVER TAP G1/4-G3/8 RST	1
2	5.0.025.1386	JUNTA TEFLON 21X16,8X2	TEFLON GASKET	1
3	5.0.025.6508	GUIA MOLA TUBO AGUA/VAPOR TORN. EVOL.	GUIDE BUSH	1
4	5.0.025.7060	MOLA TUBO AGUA/VAPOR TORN. EVOL.	SPRING TAP	1
5	5.0.016.7320	TUBO TORNEIRA VAPOR CARAVEL (CONJ.)	STEAM TAP TUBE CARAVEL ASS.	1

PEÇAS P/ ADAPTADOR MANIPULO / TAP KNOB ADAPTER PARTS

CÓDIGO	DESIGNAÇÃO	DESIGNATION	QUANT.
5.0.007.0011-A	RACORD ADAPT. TR18X4A2P-M8F TORN. ALAVANCA RST	RACORD ADAPT. LEVER TAP RST	1
5.0.007.0012	PARAFUSO SEM CAB. UMBR. M8X10 ZINC. DIN916	ZINC-PLATED SOCKET SET SCREW M8X10 DIN916	1



Management System ISO 9001:2015
TÜVRheinland CERTIFIED
www.tuv.com ID 9108624282

www.fiamma.pt

This drawing may be altered without previous notice.
Os elementos deste desenho podem ser alterados sem aviso prévio.

MB „Restoranų įranga“ · Vito Gerulaičio 1-59, LT-08200 Vilnius · +370 614 89888 · info@restoranu.eu · www.restoranu.eu

MÁQ. CAFÉ CARAVEL 3 CV / 3 CV TC RESTYLE

ESPRESSO COFFEE MACHINE CARAVEL 3 CV / 3 CV TC RESTYLE

MÁQUINAS GRUPOS ALTOS / TALL CUPS MACHINES

18 - 4.0.016.0020 - TORNEIRA ECC-07 G1/4-G1/8F (CONJ. VAPOR)

18 - STEAM TAP G1/4-G1/8F ASSEMB. (GR.ECC-07)

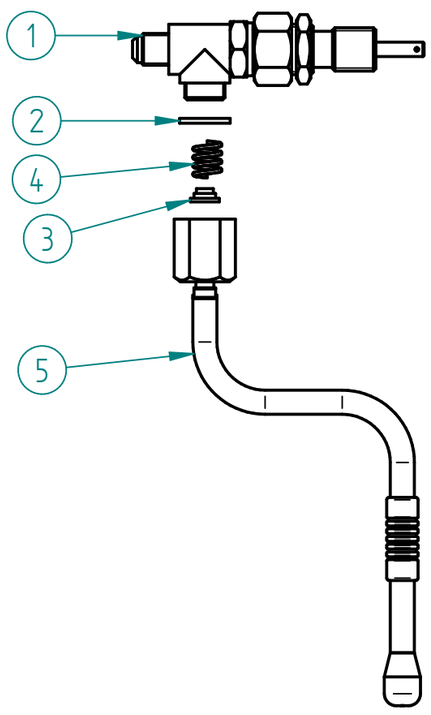

ITEM Nº	CODIGO	DESIGNAÇÃO	DESIGNATION	QUANT.
1	5.0.016.0350	TORNEIRA ECC-07 G1/4-G1/8F	TAP ECC-07	1
2	5.0.025.1386	JUNTA TEFLON 21X16,8X2	TEFLON GASKET	1
3	5.0.025.6508	GUIA MOLA TUBO AGUA/VAPOR TORN. EVOL.	GUIDE BUSH	1
4	5.0.025.7060	MOLA TUBO AGUA/VAPOR TORN. EVOL.	SPRING TAP	1
5	5.0.016.0320	TUBO TORNEIRA VAPOR ATLANTIC (CONJ.)	STEAM TAP TUBE ASS.	1

OPCIONAL:

18 - 7.0.016.0075 -TORNEIRA ALAVANCA G1/4-G3/8 RST (CONJ. VAPOR)

18 - COOL TOUCH TAP G1/4-G3/8 RST (STEAM ASS.) LC

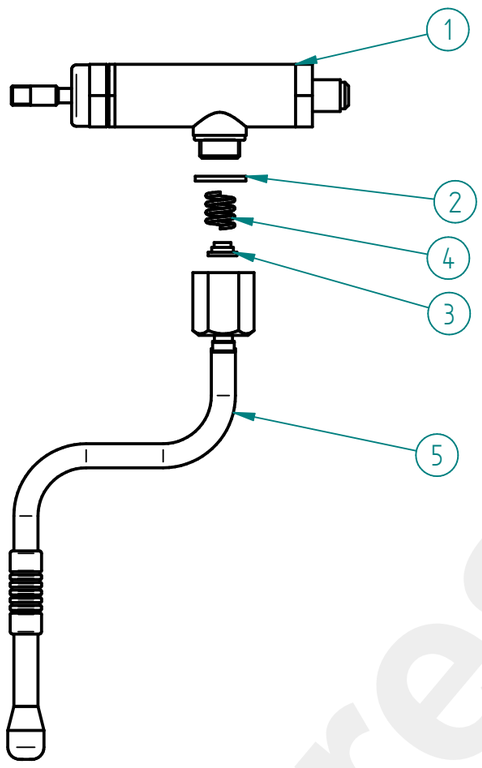

ITEM Nº	CÓDIGO	DESIGNAÇÃO	DESIGNATION	QUANT.
1	5.0.007.0010	TORNEIRA ALAVANCA G1/4-G3/8 RST	LEVER TAP G1/4-G3/8 RST	1
2	5.0.025.1386	JUNTA TEFLON 21X16,8X2	TEFLON GASKET	1
3	5.0.025.6508	GUIA MOLA TUBO AGUA/VAPOR TORN. EVOL.	GUIDE BUSH	1
4	5.0.025.7060	MOLA TUBO AGUA/VAPOR TORN. EVOL.	SPRING TAP	1
5	5.0.016.0320	TUBO TORNEIRA VAPOR ATLANTIC (CONJ.)	STEAM TAP TUBE ASS.	1

PEÇAS P/ ADAPTADOR MANIPULO / TAP KNOB ADAPTER PARTS

CÓDIGO	DESIGNAÇÃO	DESIGNATION	QUANT.
5.0.007.0011-A	RACORD ADAPT. TR18X4A2P-M8F TORN. ALAVANCA RST	RACORD ADAPT. LEVER TAP RST	1
5.0.007.0012	PARAFUSO SEM CAB. UMBR. M8X10 ZINC. DIN916	ZINC-PLATED SOCKET SET SCREW M8X10 DIN916	1

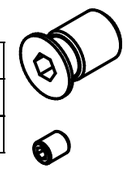

3/18 - 7.0.007.0151 -TORNEIRA ALAVANCA G1/4-G3/8 RST (CONJ. VAPOR) COOL TOUCH LC

3/18 - COOL TOUCH TAP G1/4-G3/8 RST (STEAM ASS.) LC

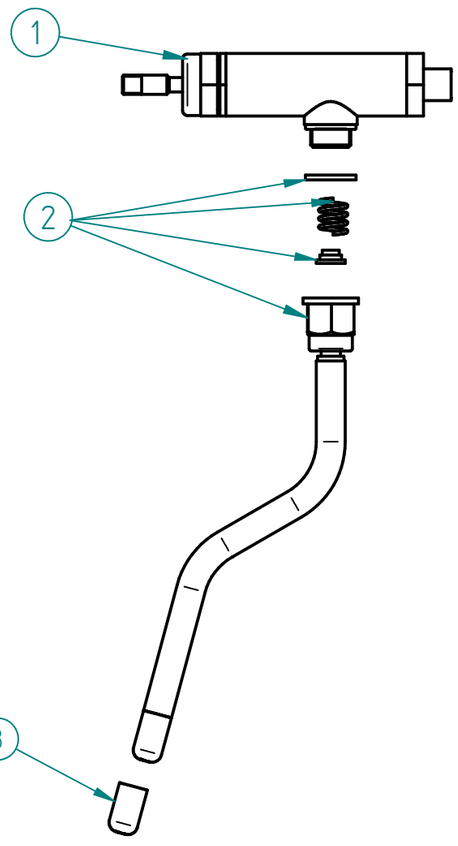

ITEM Nº	CÓDIGO	DESIGNAÇÃO	DESIGNATION	QUANT.
1	5.0.007.0010	TORNEIRA ALAVANCA G1/4-G3/8 RST	LEVER TAP G1/4-G3/8 RST	1
2	5.0.007.0340	TUBO TORNEIRA VAPOR COOL TOUCH (CONJ.) LOW CUPS	COOL TOUCH STEAM TAP TUBE	1
3	5.0.028.0345	ESPALHADOR VAPOR TORN. COOL TOUCH - 3 FUROS	SPRAYER OF THE COOL TOUCH STEAM TAP - 3 HOLES	1

PEÇAS P/ ADAPTADOR MANIPULO / TAP KNOB ADAPTER PARTS

CÓDIGO	DESIGNAÇÃO	DESIGNATION	QUANT.
5.0.007.0011-A	RACORD ADAPT. TR18X4A2P-M8F TORN. ALAVANCA RST	RACORD ADAPT. LEVER TAP RST	1
5.0.007.0012	PARAFUSO SEM CAB. UMBR. M8X10 ZINC. DIN916	ZINC-PLATED SOCKET SET SCREW M8X10 DIN916	1



restoranu.eu

MÁQ. CAFÉ CARAVEL 3 CV / 3 CV TC RESTYLE

ESPRESSO COFFEE MACHINE CARAVEL 3 CV / 3 CV TC RESTYLE

4 - 4.0.016.0021 - TORNEIRA ECC-07 G1/4-G1/8F (CONJ. AGUA)

4 - WATER TAP ASS. ECC-07

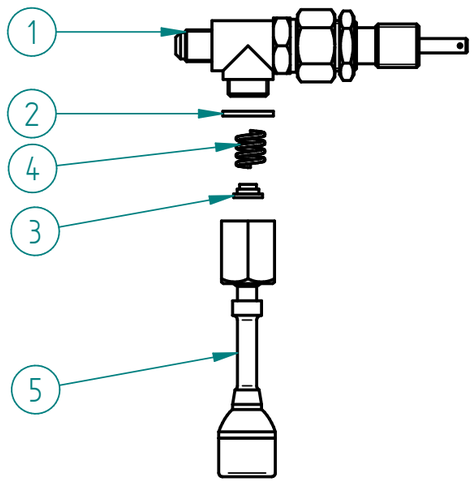

ITEM Nº	CODIGO	DESIGNAÇÃO	DESIGNATION	QUANT.
1	5.0.016.0350	TORNEIRA ECC-07 G1/4-G1/8F	TAP ECC-07	1
2	5.0.025.1386	JUNTA TEFLON 21X16,8X2	TEFLON GASKET	1
3	5.0.025.6508	GUIA MOLA TUBO AGUA/VAPOR TORN. EVOL.	GUIDE BUSH	1
4	5.0.025.7060	MOLA TUBO AGUA/VAPOR TORN. EVOL.	SPRING TAP	1
5	5.0.016.0330	TUBO TORNEIRA AGUA ATLANTIC (CONJ.)	WATER TAP TUBE ASS.	1

OPCIONAL:

4 - 7.0.007.0155 - TORNEIRA ALAVANCA G1/4-G3/8 RST (CONJ. AGUA)

4 - TAP G1/4-G3/8 RST (WATER ASS.)

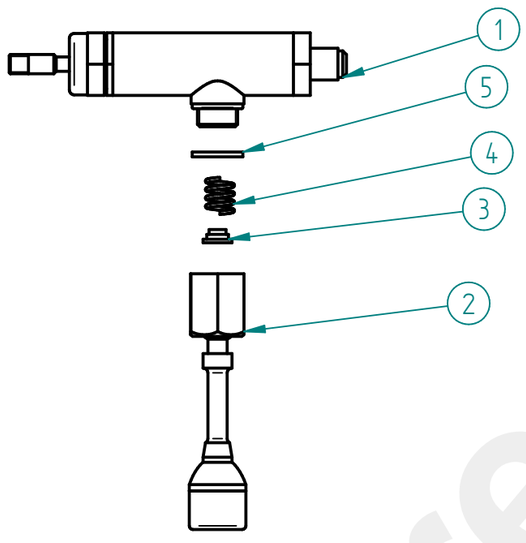

ITEM Nº	CÓDIGO	DESIGNAÇÃO	DESIGNATION	QUANT.
1	5.0.007.0010	TORNEIRA ALAVANCA G1/4-G3/8 RST	LEVER TAP G1/4-G3/8 RST	1
2	5.0.016.0330	TUBO TORNEIRA AGUA ATLANTIC (CONJ.)	WATER TAP TUBE ASS.	1
3	5.0.025.6508	GUIA MOLA TUBO AGUA/VAPOR TORN. EVOL.	GUIDE BUSH	1
4	5.0.025.7060	MOLA TUBO AGUA/VAPOR TORN. EVOL.	SPRING TAP	1
5	5.0.025.1386	JUNTA TEFLON 21X16,8X2	TEFLON GASKET	1

PEÇAS P/ ADAPTADOR MANIPULO / TAP KNOB ADAPTER PARTS

CÓDIGO	DESIGNAÇÃO	DESIGNATION	QUANT.
5.0.007.0011-A	RACORD ADAPT. TR18X4A2P-M8F TORN. ALAVANCA RST	RACORD ADAPT. LEVER TAP RST	1
5.0.007.0012	PARAFUSO SEM CAB. UMBR. M8X10 ZINC. DIN916	ZINC-PLATED SOCKET SET SCREW M8X10 DIN916	1



restoranu.eu

MÁQ. CAFÉ CARAVEL 3 CV / 3 CV TC RESTYLE

ESPRESSO COFFEE MACHINE CARAVEL 3 CV / 3 CV TC RESTYLE

5.0.016.0350 – TORNEIRA ECC-07 G1/4-G1/8F

TAP ECC-07

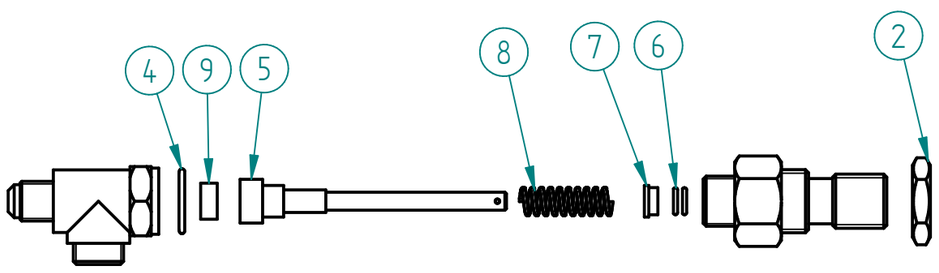

ITEM Nº	CODIGO	DESIGNAÇÃO	DESIGNATION	QUANT.
2	4.0.155.0015	PORCA G1/2 LATAO	BRASS NUT G1/2	1
4	5.0.016.0303	JUNTA COBRE 22X17X2MM TORN. ECC-07	TAP GASKET	1
5	5.0.016.0308	VEIO TORNEIRA ECC-07	TAP ECC-07 SHAFT	1
6	5.0.016.0306	ORING VEIO TORN. ECC-07	TAP SHAFT ORING	2
7	5.0.016.0305	CASQUILHO VEIO TORN. ECC-07	METAL SLEEVE	1
8	5.0.016.0302	MOLA VEIO TORN. ECC-07	TAP SHAFT SPRING	1
9	5.0.016.0301	VEDANTE BORRACHA TORN. ECC-07	TAP ECC-07 GASKET	1

5.0.016.0320 – TUBO TORNEIRA VAPOR ATLANTIC (CONJ.)

STEAM TAP TUBE ASS.

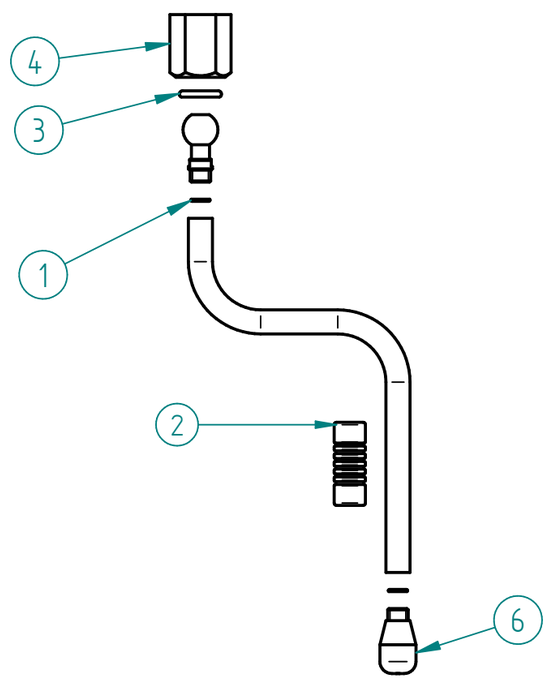

ITEM Nº	CODIGO	DESIGNAÇÃO	DESIGNATION	QUANT.
1	5.0.016.0323	ORING 6X1 TUBO VAPOR ATLANTIC	ORING 6X1	2
2	4.0.000.0814	PINÇA ISOLANTE TUBO VAPOR 10MM	INSULATING HANDGRIP 10MM	1
3	5.0.025.0205	ORING 12,1x2,7 PORCA TUBO TORN.	ORING 12,1x2,7	1
4	5.0.016.0321	PORCA TUBO TORN. ATLANTIC	TAP TUBE NUT	1
6	5.0.028.0328	ESPALHADOR VAPOR TORN. PACIFIC M8,5X0,75 – 3 FUROS	SPRAYER OF THE STEAM TAP – 3 HOLES	1

5.0.016.0330 – TUBO TORNEIRA AGUA ATLANTIC (CONJ.)

WATER TAP TUBE ASS.

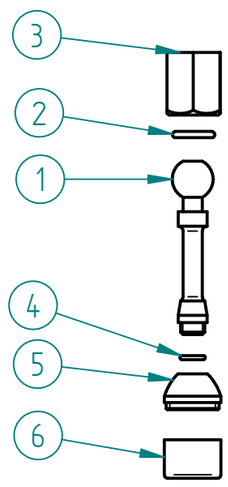

ITEM Nº	CODIGO	DESIGNAÇÃO	DESIGNATION	QUANT.
1	5.0.016.0331	TUBO TORNEIRA AGUA CROM. ATLANTIC	WATER TAP TUBE	1
2	5.0.025.0205	ORING 12,1x2,7 PORCA TUBO TORN.	ORING 12,1x2,7	1
3	5.0.016.0321	PORCA TUBO TORN. ATLANTIC	TAP TUBE NUT	1
4	5.0.000.0565	ORING 7,2X1,9 VEIO TORN. BR-03	TAP SHAFT ORING	1
5	5.0.000.0640	PONTEIRA TUBO ÁGUA	POINT OF THE WATER TUBE	1
6	5.0.000.0148	ESPALHADOR PONTEIRA ÁGUA	SPRAYER OF THE WATER POINT	1

5.0.007.0010 – TORNEIRA ALAVANCA G1/4-G3/8 RST

LEVER TAP G1/4-G3/8 RST

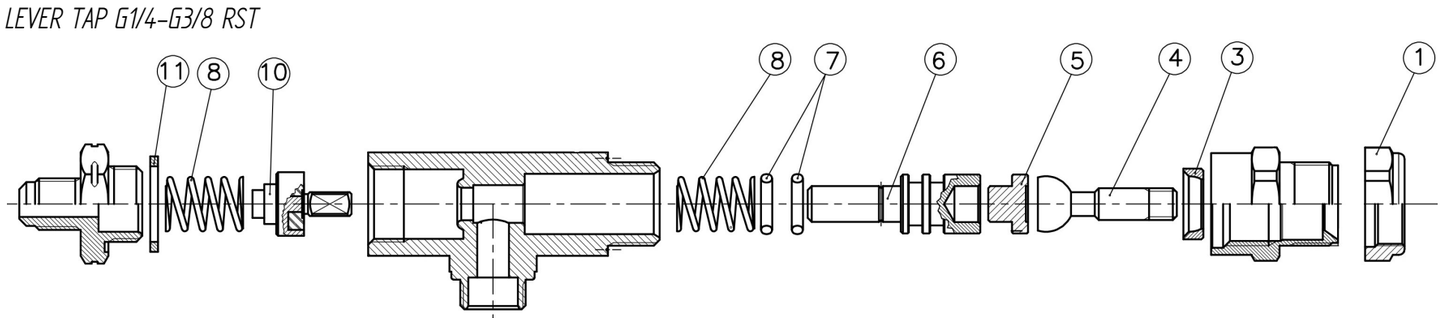

ITEM	CÓDIGO	DESIGNAÇÃO	DESIGNATION	QUANT.
1	5.0.007.0311	PORCA M21X1 CROM. TORN. ALAVANCA	NUT M21X1 CROM. LEVER TAP	1
3	5.0.007.0309	INSERTO AÇO NITRO. TORN ALAVANCA	STEEL INSERT LEVER TAP	1
4	5.0.007.0308	VEIO FRONTAL AÇO NITRO. C/ ESFERA TORN. ALAVANCA	FRONT SHAFT LEVER TAP	1
5	5.0.007.0307	CASQUILHO AÇO NITRO. TORN. ALAVANCA	METAL SLEEVE LEVER TAP	1
6	5.0.007.0305	VEIO POSTERIOR PORTA ORINGS TORN. ALAVANCA	REAR SHAFT LEVER TAP	1
7	5.0.007.0306	ORING VEIO POST. TORN. ALAVANCA	REAR SHAFT ORING LEVER TAP	2
8	5.0.007.0304	MOLA VEIO TORN. ALAVANCA	SHAFT SPRING LEVER TAP	2
10	5.0.007.0301	VALVULA ANTI-RETORNO TORN. ALAVANCA	ANTI-BACKFLOW VALVE LEVER TAP	1
11	5.0.007.0302	JUNTA TEFLON 24X19X2 TORN. ALAVANCA	TEFLON GASKET 24X19X2MM LEVER TAP	1

restoranu.eu

MÁQ. CAFÉ CARAVEL 3 CV / 3 CV TC RESTYLE

ESPRESSO COFFEE MACHINE CARAVEL 3 CV / 3 CV TC RESTYLE

5 - GRUPO ECC-07 C/ ACESSORIOS

5 - ECC-07 GROUP W/ ACESS.

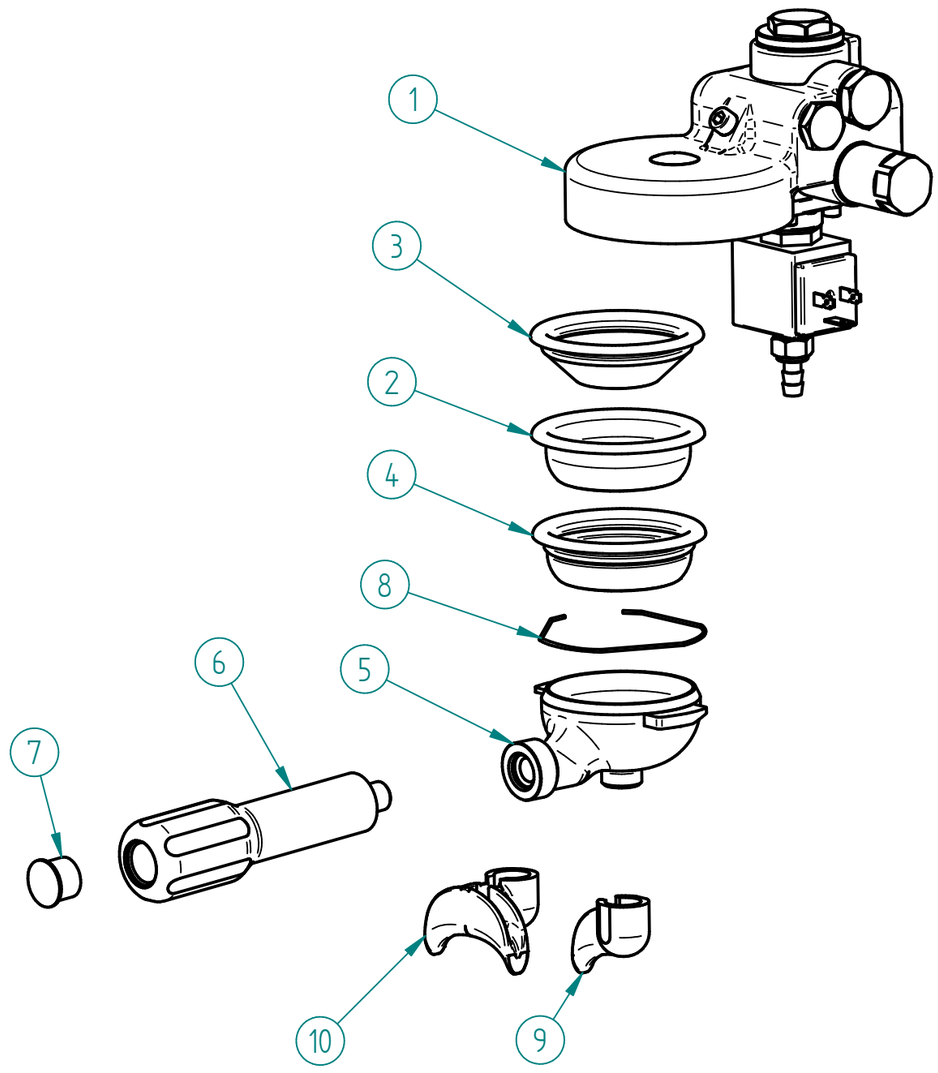

ITEM Nº	CÓDIGO	DESIGNAÇÃO	DESIGNATION	QUANT.
1	7.0.016.0080	GRUPO ECC-07 CONJ.	ECC-07 GROUP ASS.	1
2	5.0.000.0167	FILTRO CEGO	BLIND FILTER	1
3	5.0.000.0162	FILTRO 1 BICA 6GR NV	6GR 1 CUP FILTER	1
4	5.0.000.0173	FILTRO 2 BICAS 12 GR	2 COFFEES FILTER 12 GR	1
5	5.0.000.0657	PORTA FILTRO INCLIN. - FIX. 6 MM	FILTER HOLDER	1
6	5.0.000.0655	PUNHO PORTA FILTRO INCLIN.	HANDGRIP FOR FILTER HOLDER	1
7	5.0.000.0654	TAMPA PUNHO PORTA FILTRO INCLIN.	PLUG FOR HANDGRIP	1
8	5.0.000.0411	MOLA PORTA FILTRO 1,2MM	FILTER HOLDER SPRING	1
9	5.0.000.0104	DISTRIBUIDOR 1 BICA CURVO	1 COFFEE SPECIAL OUTLET	1
10	5.0.000.0106	DISTRIBUIDOR 2 BICAS	2 COFFEES OUTLET	1

CÓDIGO	DESIGNAÇÃO	DESIGNATION
5.0.000.0651	PORTA FILTRO M12 INCLIN. CONJ. - 1 BICA	1 COFFEE FILTER HOLDER ASS.
5.0.000.0652	PORTA FILTRO M12 INCLIN. CONJ. - 2 BICAS	2 COFFEE FILTER HOLDER ASS.
5.0.000.0668	PORTA FILTRO M12 INCLIN. CONJ. - CAPSULAS	CAPSULES FILTER HOLDER ASS.

1 - 7.0.016.0080 - GRUPO ECC-07 CONJ.

1 - GROUP ECC-07 ASS.

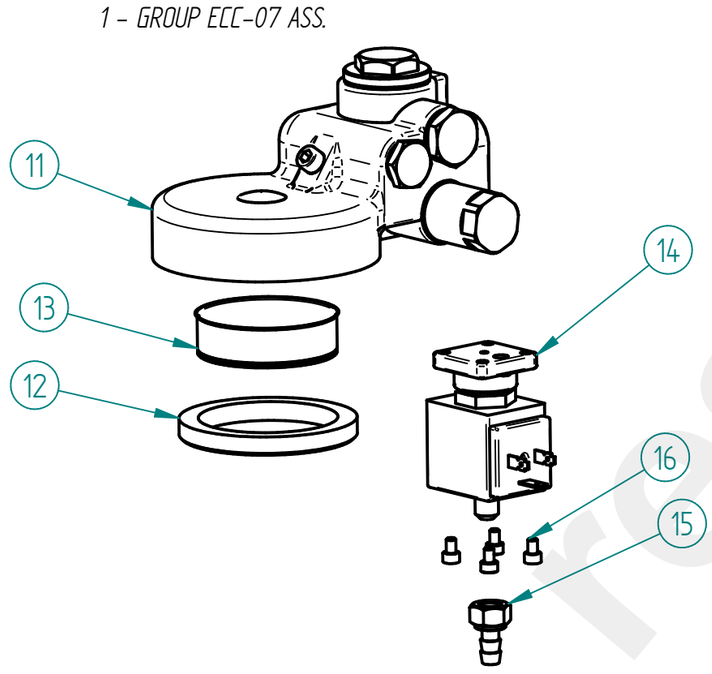

ITEM Nº	CÓDIGO	DESIGNAÇÃO	DESIGNATION	QUANT.
11	4.0.016.0000	GRUPO ECC-07	GROUP ECC-07	1
12	5.0.025.0012	JUNTA PORTA FILTRO 58X74X8,5MM (GR B-61/ECC-07)	FILTER HOLDER GASKET	1
13	5.0.025.0010	CRIVO GRUPO B-61/ECC-07	GROUP B-61 SIEVE	1
14	5.0.000.0123	ELECTROVALVULA 3 VIAS 230V - GRUPO	230V 3 WAY ELECTROVALVE GROUP	1
15	4.0.000.0198	RACORD DESCARGA ELECTROVALVULA	ELECTROVALVE DRAINAGE RACCORD	1
16	4.2.000.9606	PARAF. UMBRACO M4X6 INOX DIN912	M4X6 INOX DIN912 UMBRACO SCREW	4

11 - 4.0.016.0000 - GRUPO ECC-07

11 - GROUP ECC-07

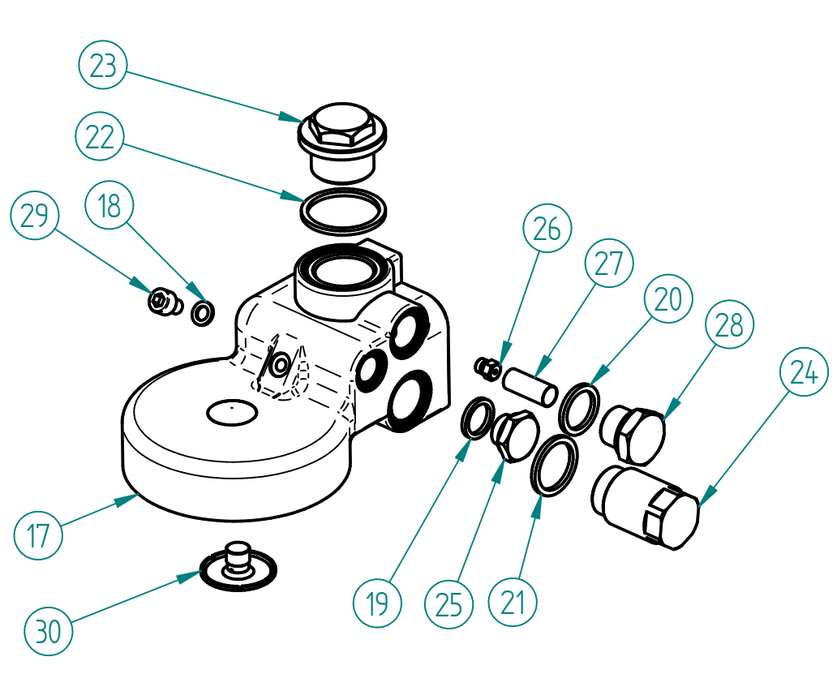

ITEM Nº	CODIGO	DESIGNAÇÃO	DESIGNATION	QUANT.
17	5.0.016.0100	CORPO GRUPO ECC-07	BODY OF THE GROUP ECC-07	1
18	5.0.025.0015	JUNTA TEFLON 10X6X1	TEFLON GASKET	1
19	5.0.000.0315	JUNTA TEFLON 18X13,5X2MM	TEFLON GASKET	1
20	5.0.025.0022	JUNTA TEFLON 22X17X2	TEFLON GASKET	1
21	5.0.016.0106	JUNTA TEFLON 26X 21X2	TEFLON GASKET	1
22	5.0.025.0002	JUNTA TEFLON 35X30X2	TEFLON GASKET	1
23	5.0.016.0102	TAMPAO SUPERIOR M26X1,5 CROM. GR ECC-07	UPPER CHROM. COVER M26X1,5 (GR ECC-07)	1
24	5.0.016.0105	INFUSOR GRUPO ECC-07	INFUSER OF GROUP ECC-07	1
25	5.0.016.0104	TAMPAO LATERAL G1/4 CROM. GR ECC-07	CHROM. SIDE COVER G1/4 (GR ECC-07)	1
26	5.0.016.0110	INJECTOR 0.7 M6X0,75 (GR ECC-07)	INJECTOR 0,7 M6X0,75 (GR ECC-07)	1
27	5.0.025.0023	FITRO INOX INJECTOR	GROUP GIGLEUR FILTER	1
28	5.0.025.0021	TAMPAO G3/8 CROM. (GR B-61/GR EC-07)	CHROM. COVER G3/8 (GR B-61/GR ECC-07)	1
29	5.0.025.0003	PARAFUSO UMBRACO M6X10 INOX (GR B-61/ECC-07)	FRONT INOX SCREW M6X10 OF THE GROUP B-61	1
30	5.0.025.0009	DISTRIBUIDOR GRUPO B-61/ECC-07	OUTLET GROUP B-61/ECC-07	1

restoranu

MÁQ. CAFÉ CARAVEL 3 CV / 3 CV TC RESTYLE

ESPRESSO COFFEE MACHINE CARAVEL 3 CV / 3 CV TC RESTYLE

MÁQUINAS GRUPOS BAIXOS / LOW CUPS MACHINES

14 - PAINEL FRONTAL CONJ. CARAVEL 3 CV

14 - FRONT PANEL CARAVEL 3 CV

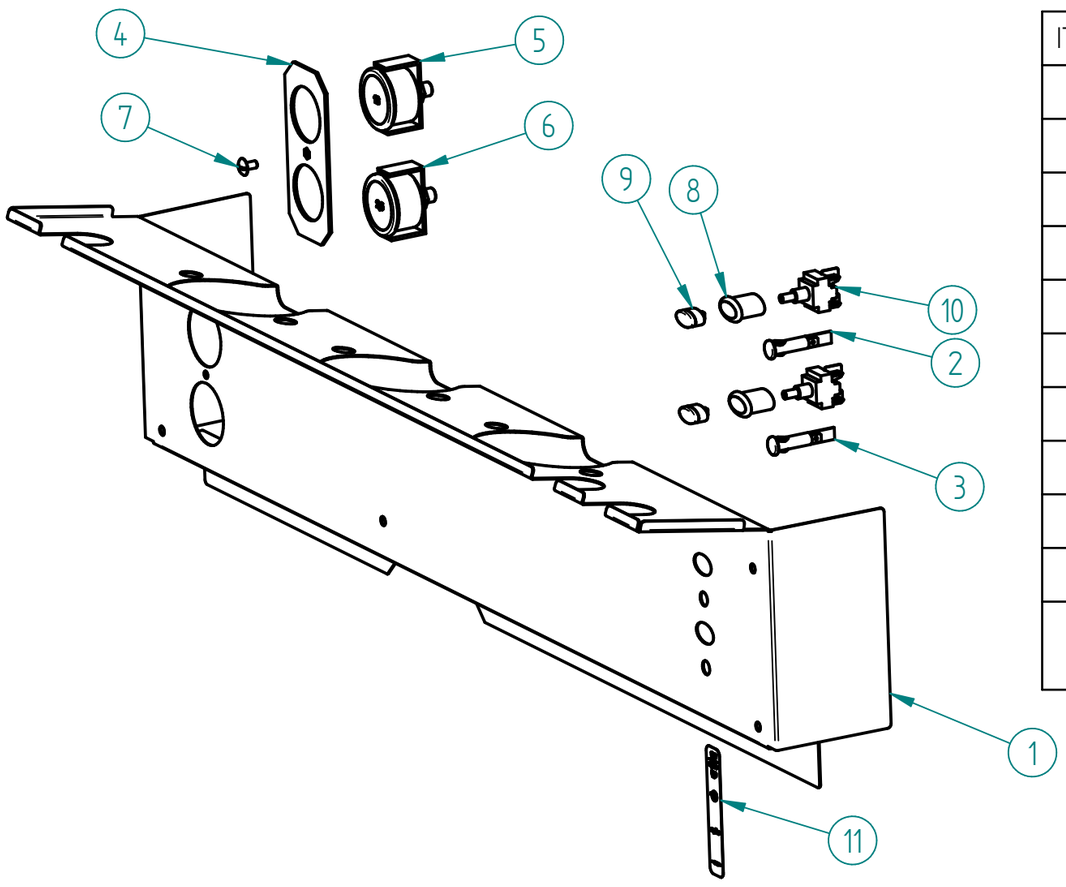

ITEM Nº	CÓDIGO	DESIGNAÇÃO	DESIGNATION	QUANT.
1	7.0.018.7002-B	PAINEL FRONTAL C/ LED CARAVEL 3	FRONT PANEL W/ LED CARAVEL 3	1
2	4.0.025.0130	SINALIZADOR VERDE Φ10MM TERM. MACHO	GREEN LED Φ10MM	1
3	4.0.025.0135	SINALIZADOR LARANJA Φ10MM TERM. MACHO	ORANGE LED Φ10MM	1
4	7.0.016.0204	SUPORTE MANÓMETROS ATLANTIC	ATLANTIC GAUGE SUPPORT	1
5	5.0.000.0391	MANOMETRO 0-16BAR	PRESSURE GAUGE 0-16BAR	1
6	5.0.000.0392	MANOMETRO 0-2,5BAR	PRESSURE GAUGE 0-2,5BAR	1
7	4.2.000.9116	PARAFUSO CAB. OVAL LARGA M5X10 NIQ	SCREW M5X10	1
8	4.0.000.0503	CAIXA ELIPSE D16	BOX D16 ELIPSE	2
9	4.0.000.0507	TASTO ELIPSE D16	SWITCH KEY D16	2
10	4.0.000.0513	INTERRUPTOR BIPOLAR E0070	TWO POLES SWITCH E0070	2
11	4.0.007.0064	AUTOCOLANTE INTERRUPTOR GERAL COMPASS	MAIN SWITCH SELF-STICKING PLATE COMPASS	1

MÁQUINAS GRUPOS ALTOS / TALL CUPS MACHINES

14 - PAINEL FRONTAL CONJ. CARAVEL 3 CV TC

14 - FRONT PANEL CARAVEL 3 CV TC

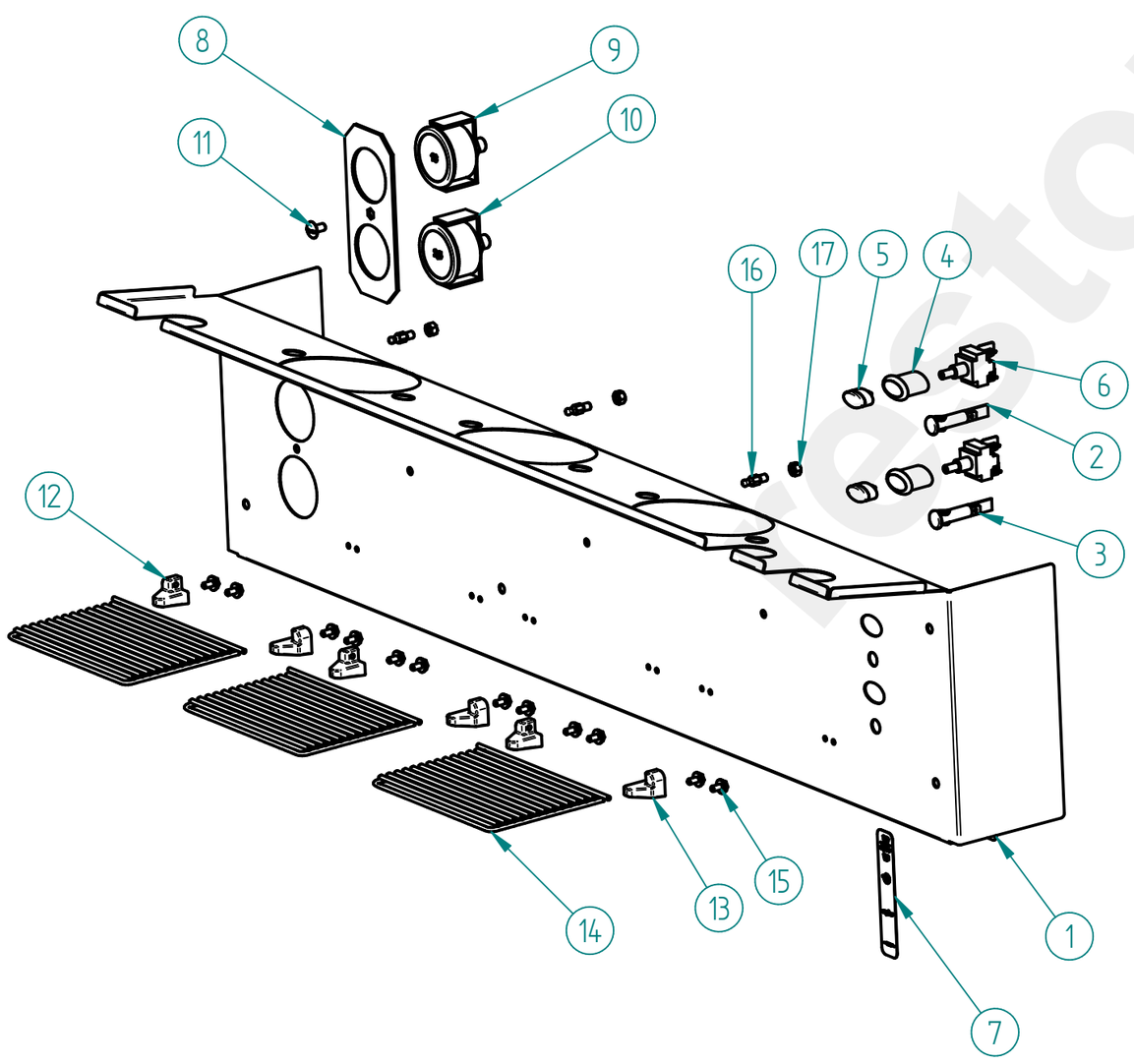

ITEM Nº	CÓDIGO	DESIGNAÇÃO	DESIGNATION	QUANT.
1	7.0.018.7203-A	PAINEL FRONTAL GRELHA ARAME C/ LED CARAVEL 3 TC	FRONT PANEL CARAVEL 3 TC	1
2	4.0.025.0130	SINALIZADOR VERDE Φ10MM TERM. MACHO	GREEN LED Φ10MM	1
3	4.0.025.0135	SINALIZADOR LARANJA Φ10MM TERM. MACHO	ORANGE LED Φ10MM	1
4	4.0.000.0503	CAIXA ELIPSE D16	BOX D16 ELIPSE	2
5	4.0.000.0507	TASTO ELIPSE D16	SWITCH KEY D16	2
6	4.0.000.0513	INTERRUPTOR BIPOLAR E0070	TWO POLES SWITCH E0070	2
7	4.0.007.0064	AUTOCOLANTE INTERRUPTOR GERAL COMPASS	MAIN SWITCH SELF-STICKING PLATE COMPASS	1
8	7.0.016.0204	SUPORTE MANÓMETROS ATLANTIC	ATLANTIC GAUGE SUPPORT	1
9	5.0.000.0391	MANOMETRO 0-16BAR	PRESSURE GAUGE 0-16BAR	1
10	5.0.000.0392	MANOMETRO 0-2,5BAR	PRESSURE GAUGE 0-2,5BAR	1
11	4.2.000.9116	PARAFUSO CAB. OVAL LARGA M5X10 NIQ	SCREW M5X10	1
12	4.0.016.7018	SUPORTE ESQUERDO GRELHA CHAVENAS ARAME	WIRE CUP LEFT SUPPORT	3
13	4.0.016.7017	SUPORTE DIREITO GRELHA CHAVENAS ARAME	WIRE CUP RIGHT SUPPORT	3
14	4.0.016.7015	GRELHA CHAVENAS ARAME CARAVEL/COMPASS/QUADRANT	WIRE COFFEE TRAY GRID	3
15	4.2.000.9126	PARAFUSO ROSCA PLASTICO K40X8 ZINC.	SCREW K40X8	12
16	4.0.016.7020	FIXADOR GRELHA CHAVENAS ARAME	FIXER PIN	3
17	4.2.000.9172	PORCA M5 ZINC. DIN934	M5 NUT ZINC. DIN934	3

OPCIONAL: (LEDS)

CÓDIGO	DESIGNAÇÃO	DESIGNATION	QUANT.
4.0.007.0040	LED BRANCO Φ16MM 0,36W 12V	WHITE LED LIGHT ⌀16MM 0,36W 12V	6
4.0.007.0044	CABO LED BRANCO Φ16MM LIGADOR	WHITE LED CABLE Φ16MM TERMINAL BLOCK	6
4.0.000.0949	TRANSFORMADOR 240VAC/12VDC	TRANSFORMER 240VAC/12VDC	1
4.0.016.5065	CABO TRANSFORMADOR 240VAC/12VDC LEDS CARAVEL	CABLE TRANSFORMER 240VAC/12VDC LEDS	1
4.2.000.9256	SHUNT RAPIDO 3 CONTACTOS	FAST LINKER	6

www.fiamma.pt

This drawing may be altered without previous notice.
Os elementos deste desenho podem ser alterados sem aviso prévio.

MÁQ. CAFÉ CARAVEL 3 CV / 3 CV TC RESTYLE

ESPRESSO COFFEE MACHINE CARAVEL 3 CV / 3 CV TC RESTYLE

20 – CONTADOR VOLUMETRICO CONJ. MÁQ. CAFÉ 2GR / 3GR

20 – ASS. VOLUMETRIC DOSER COFFEE MACHINES 2GR / 3GR

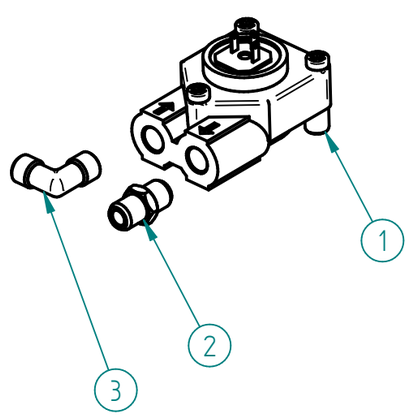

ITEM Nº	CÓDIGO	DESIGNAÇÃO	DESIGNATION	QUANT.
1	5.0.000.1012	CONTADOR VOLUMETRICO D1,15-G1/8 C/ LED	VOLUMETRIC DOSER D1,15-G1/8 W/ LED	1
2	5.0.000.0725	RACORD G1/8-G1/8 NIQ.	RACORD G1/8-G1/8 NIQ.	1
3	5.0.000.0730	RACORD L G1/8-G1/8	RACORD L G1/8-G1/8	1

21 – 7.0.016.0065 – BLOCO ENTRADA AGUA ECC-07 (AUT.) CONJ.

21 – WATER INLET ASS.

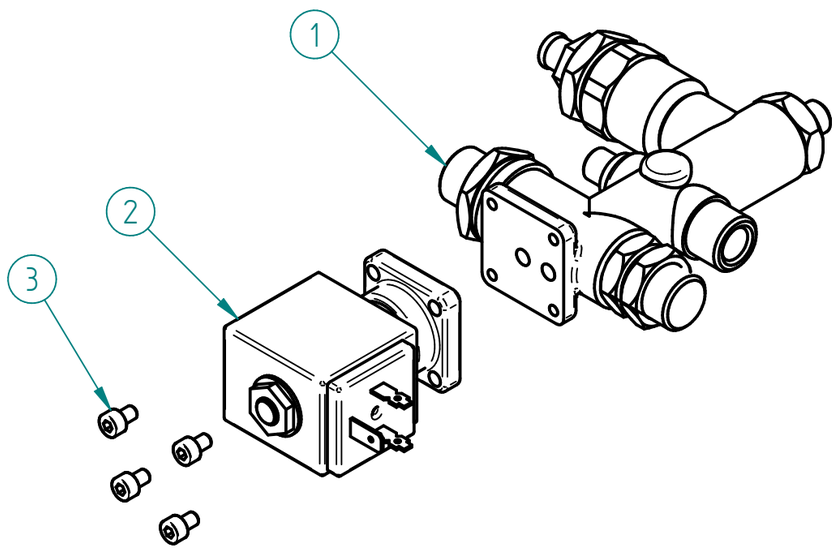

ITEM Nº	CÓDIGO	DESIGNAÇÃO	DESIGNATION	QUANT.
1	4.0.016.0010	BLOCO ENTRADA AGUA ECC-07 (AUT.)	WATER INLET ASS.	1
2	5.0.000.0124	ELECTROVAL. 2 VIAS 230V/50HZ-ENT. AGUA PARAL.	2 WAYS ELECTROVALVE	1
3	4.2.000.9606	PARAF. UMBRACO M4X6 INOX DIN912	M4X6 INOX DIN912 UMBRACO SCREW	4

1 – 4.0.016.0010 – BLOCO ENTRADA AGUA ECC-07 (AUT.)

1 – WATER INLET ASS.

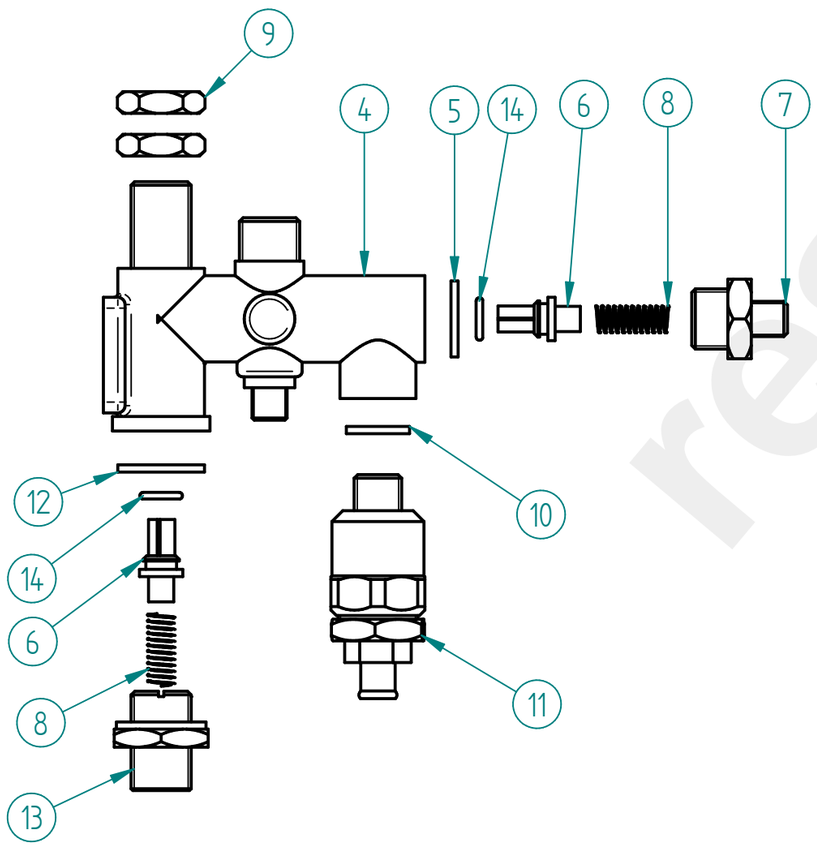

ITEM Nº	CODIGO	DESIGNAÇÃO	DESIGNATION	QUANT.
4	5.0.016.0200	CORPO BLOCO AUT. ECC-07	DISTRIBUTION GROUP BODY (AUT. ECC-07)	1
5	5.0.025.1386	JUNTA TEFLON 21X16,8X2	TEFLON GASKET	1
6	5.0.016.0231	VALVULA ANTI-RETORNO BLOCO ECC-07	ANTI-BACKFLOW VALVE	2
7	5.0.016.0235	RACORD G3-8 x G1-8 BLOCO ECC-07	RACORD G3/8XG1/8 (DISTRIB. GROUP ECC-07)	1
8	5.0.016.0234	MOLA VALVULA ANTI-RETORNO BLOCO ECC-07	ANTI-BACKFLOW VALVE SPRING	2
9	4.0.000.0045	PORCA G3/8 LATAO (SEXT. 21MM)	BRASS NUT G3/8 (21MM)	2
10	5.0.000.0315	JUNTA TEFLON 18X13,5X2MM	TEFLON GASKET	1
11	5.0.016.0220	VALVULA EXPANSAO BLOCO ECC-07	EXPANSION VALVE (DISTRIB. GROUP ECC-07)	1
12	5.0.016.0211	JUNTA TEFLON 24X19X2	TEFLON GASKET	1
13	5.0.016.0215	RACORD M20x1,5-G3/8 BLOCO ECC-07	RACORD M20X1,5-G3/8	1
14	5.0.000.0506	ORING 8X1,9MM VITON	O-RING 8X1,9 VITON	2

8 – 5.0.016.0220 –VALVULA EXPANSÃO BLOCO ECC-07

8 – EXPANSION VALVE (DISTIB. GROUP ECC-07)

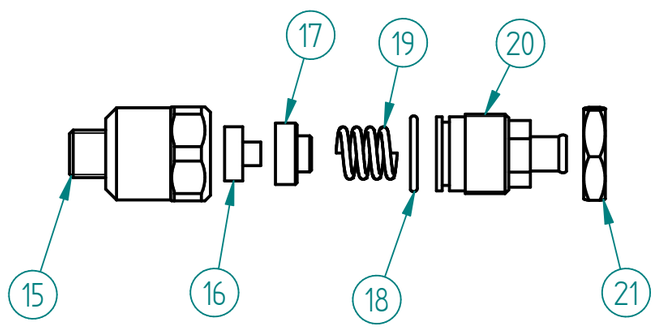

ITEM Nº	CODIGO	DESIGNAÇÃO	DESIGNATION	QUANT.
15	5.0.016.0222	CORPO VALVULA EXPAN. BLOCO ECC-07	EXPANSION VALVE BODY	1
16	5.0.016.0223	JUNTA VALVULA EXPAN. BLOCO ECC-07	EXPANSION VALVE GASKET	1
17	5.0.016.0224	SUPORTE JUNTA BLOCO ECC-07	GASKET HOLDER (DISTRIB. GROUP ECC-07)	1
18	5.0.016.0225	ORING 21X17X2	ORING 21X17X2	1
19	5.0.016.0214	MOLA 8-16KG BLOCO ECC-07	SPRING	1
20	5.0.016.0226	RACORD M22X1 VALVULA EXPAN. BLOCO ECC-07	RACORD M22X1- EXPANSION VALV.	1
21	5.0.016.0227	PORCA M22X1 LATAO	BRASS NUT M22X1	1

restoranu

MÁQ. CAFÉ CARAVEL 3 CV / 3 CV TC RESTYLE

ESPRESSO COFFEE MACHINE CARAVEL 3 CV / 3 CV TC RESTYLE

25 - CALDEIRA 17 LT C/ ACESSORIOS

25 - 17 LT BOILER W/ ACESS

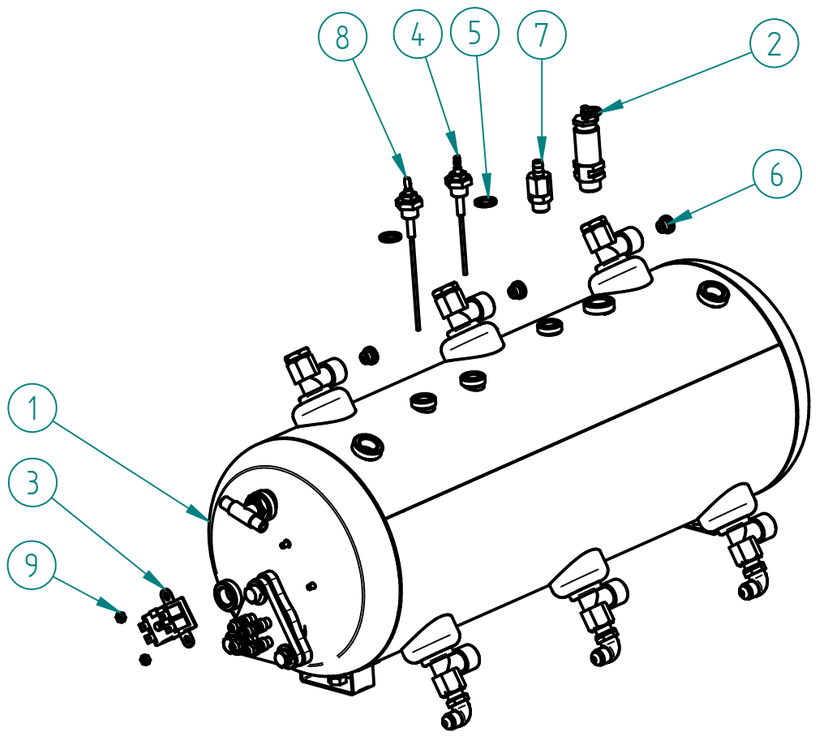

ITEM Nº	CÓDIGO	DESIGNAÇÃO	DESIGNATION	QUANT.
1	7.0.000.0516	CALDEIRA 3 GR 17 LT C/ ACESSORIOS	3 GROUP 17LT BOILER W/ ACESS.	1
2	4.0.000.0051	VALVULA SEGURANÇA CALDEIRA	BOILER SECURITY VALVE	1
3	4.0.000.0250	TERMOSTATO SEGURANÇA 130º	SAFETY THERMOSTAT 130º	1
4	7.0.016.0070	SONDA ⌀2,5X105MM CONJ.	⌀2,5X105MM PROBE ASS.	1
5	5.0.000.0315	JUNTA TEFLON 18X13,5X2MM	TEFLON GASKET	2
6	5.0.000.0748	REDUTOR CAUDAL 2,5MM	FLOW REDUCER 2,5MM	3
7	5.0.000.1002	VALVULA ANTI-VACUO	ANTI VACUUM VALVE	1
8	7.0.025.0002	SONDA ⌀2,5X135MM CONJ.	⌀2,5X135MM PROBE ASS.	1
9	4.2.000.9184	PORCA M4 LATAO DIN934	BRASS M4 NUT DIN934	2

1 - 7.0.000.0516 - CALDEIRA 3GR 17 LT C/ ACESS.

1 - 3 GROUP 17 LT BOILER W/ ACESS.

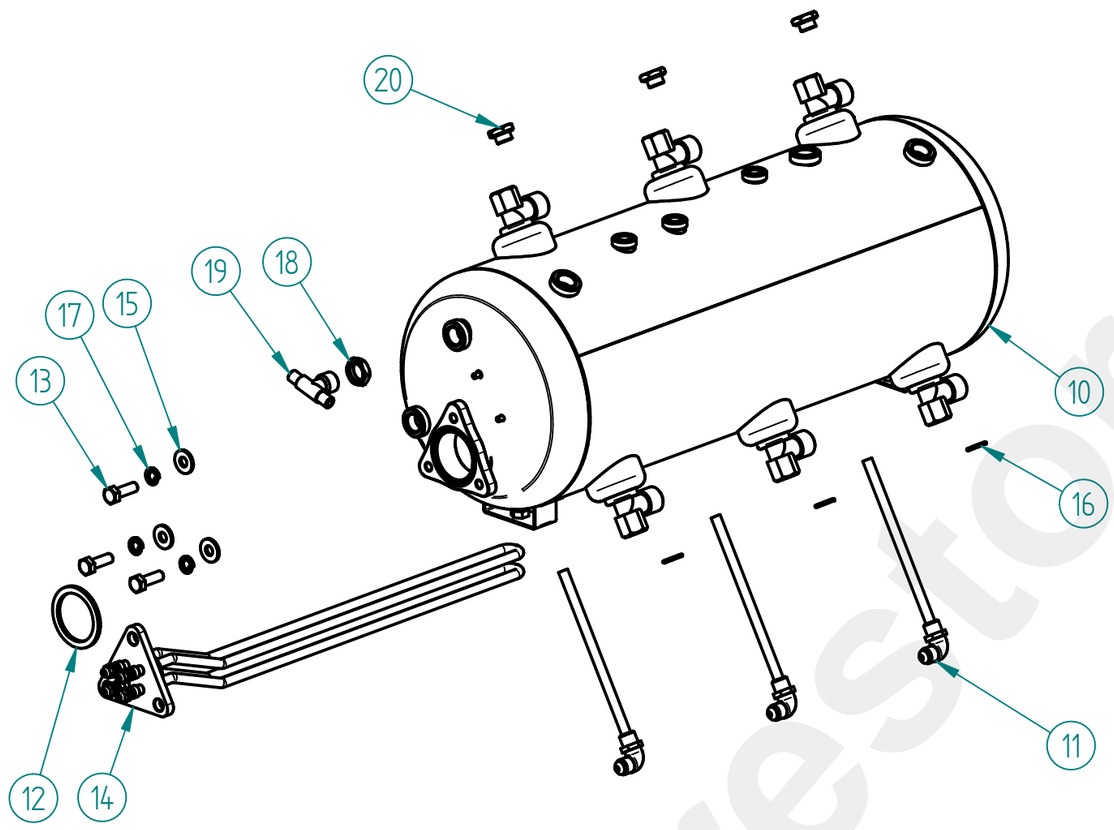

ITEM Nº	CÓDIGO	DESIGNAÇÃO	DESIGNATION	QUANT.
10	7.0.000.0546	CALDEIRA 3GR 17LT (RACORD SOLD.)	3 GROUP 17LT BOILER	1
11	7.0.000.0120	RACORD INJECTOR C/ TUBO	INJECTION RACORD W/ TUBE	3
12	5.0.000.0307	JUNTA RESISTENCIA REDONDA	HEATING ELEMENT GASKET	1
13	4.2.000.9086	PARAFUSO CAB. SEXT. M8X25 ZINC. DIN933	SCREW M8X25	3
14	4.0.000.0217	RESISTENCIA FLANGE TRIANG. 5000W 3GR	TRIANGULAR HEATING ELEMENT (5000 W)	1
15	7.2.000.0015	ANILHA PLANA 2X20X8,5 ZINC.	FLAT RING 2X20X8.5	3
16	4.0.000.0013	ANILHA 13x17MM (G1/4) COBRE	GASKET G1/4 CU	3
17	4.2.000.9147	ANILHA MOLA M8 ZINC. DIN127B	M8 SPRING WASHER	3
18	4.0.000.0045	PORCA G3/8 LATAO (SEXT. 21MM)	BRASS NUT G3/8 (21MM)	1
19	4.0.000.0071	RACORD DUPLO G3/8-2XG1/8	DOUBLE RACCORD	1
20	4.0.000.0151	TAMPAO G1/4 LATAO	BRASS COVER G1/4	3

32 - 7.0.007.0124 - MOTOR GR. BOMBA CONJ.

32- PUMP MOTOR GR. ASS.

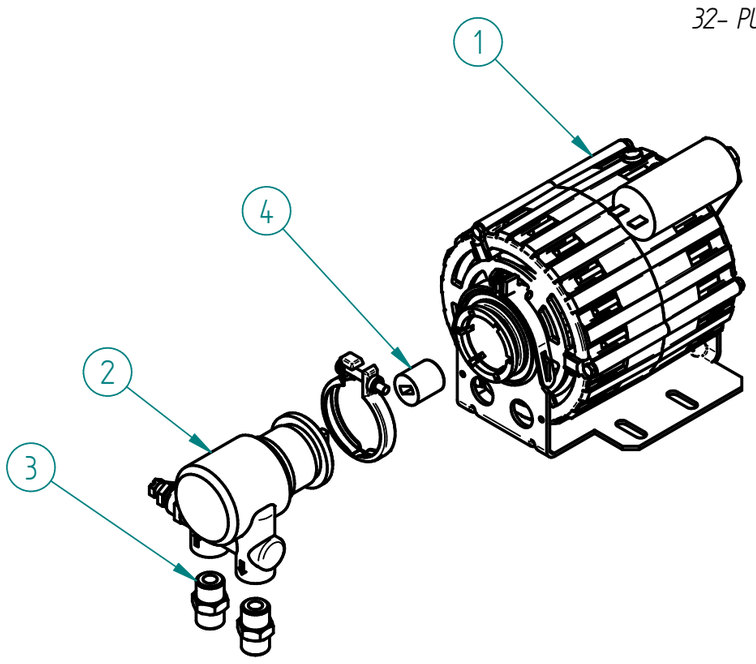

ITEM Nº	CÓDIGO	DESIGNAÇÃO	DESIGNATION	QUANT.
1	5.0.000.0485	MOTOR GR P/ ACOPLAMENTO	MOTOR GR. W/ COUPLING	1
2	5.0.000.0040	BOMBA AGUA	WATER PUMP	1
3	4.0.000.0115	RACORD G3/8-G3/8 (BOMBA)	PUMP'S METAL SLEEVE	2
4	5.0.000.0474	ACOPLAMENTO MOTOR/BOMBA	MOTOR/PUMP COUPLING	1

restoranu.eu

MÁQ. CAFÉ CARAVEL 3 CV / 3 CV TC RESTYLE

ESPRESSO COFFEE MACHINE CARAVEL 3 CV / 3 CV TC RESTYLE

60 – 7.0.034.0101 – CABO H07RN-F 5G2,5-1,8MT CONJ. MAQ. CAFE 3GR

60 – CABLE H07RN-F 3G2,5-1,8MT ASSEMB. 2GR

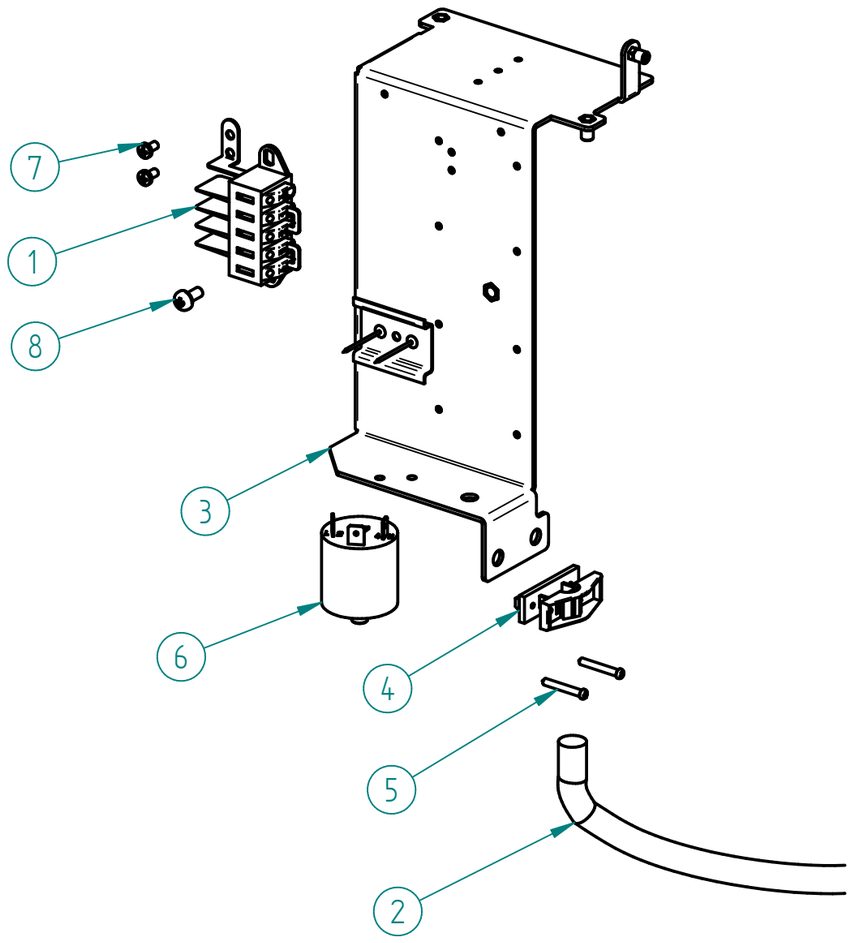

ITEM Nº	CÓDIGO	DESIGNAÇÃO	DESIGNATION	QUANT.
1	4.0.028.0015	LIGADOR RAPIDO 5 POLOS	FAST LINKER	1
2	4.0.091.0010	CABO H07RN-F 5G2,5	H07RN-F 5G2,5 CABLE	1
3	7.0.033.0051	SUPORTE LIGADOR QUADRANT	QUADRANT CONNECTOR SUPPORT	1
4	4.0.000.0496	CERRA CABOS PA 268	CABLE FASTENER PA 268	1
5	4.2.000.9129	PARAFUSO ROSCA PLASTICO KB3,5X25 ZINC.	SCREW KB3,5X25	2
6	4.0.000.0997	FILTRO EMC MAQ. CAFE	EMC FILTER COFFEE MACHINE	1
7	4.2.000.9681	PARAFUSO ROSCA CHAPA B3,9X9,5 NIQ DIN 1981	B3,9X9,5 NIQ DIN 1981 SCREW	2
8	4.2.000.9121	PARAFUSO CAB. PH M5X12 ZINC. DIN7985	M5X12 ZINC. PH HEAD SREW DIN 7985	1

restoranu.eu

Management System ISO 9001:2015
TÜVRheinland CERTIFIED
www.tuv.com ID 9108624282

www.fiamma.pt

This drawing may be altered without previous notice.
Os elementos deste desenho podem ser alterados sem aviso prévio.

R00

ESQUEMA ELECTRICO

Electric Scheme

MÁQ. CAFÉ CARAVEL 3 CV / 3 CV TC RESTYLE

ESPRESSO COFFEE MACHINE CARAVEL 3 CV / 3 CV TC RESTYLE

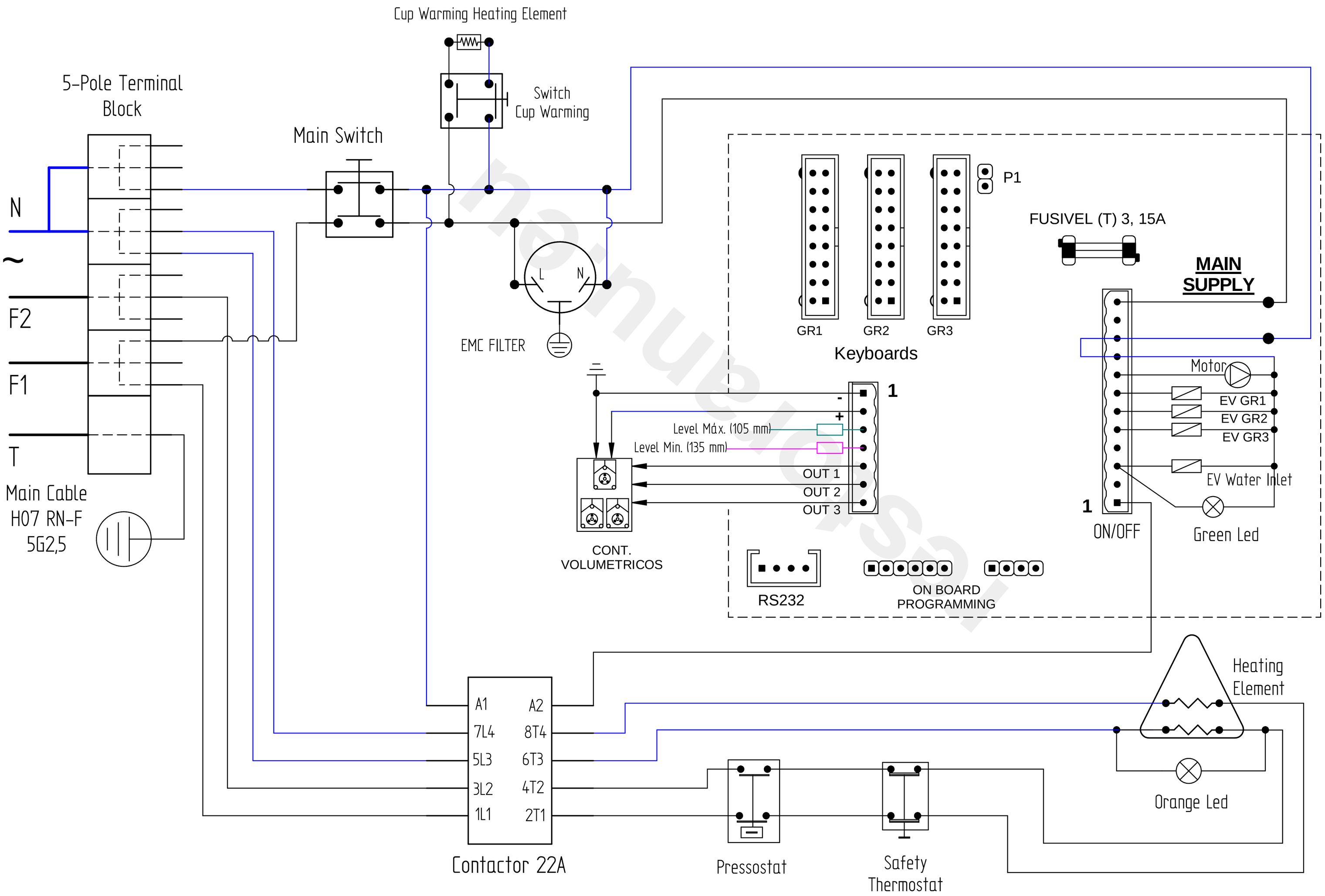

This drawing may be altered without previous notice.
Os elementos deste desenho podem ser alterados sem aviso prévio.

www.fiamma.pt

Management System ISO 9001:2015

TÜVRheinland CERTIFIED

RST

fiamma SI

MB „Restoranų įranga“ · Vilo Gerulaičio 1-59, LT-08200 Vilnius · +370 614 89888 · info@restoranu.eu · www.restoranu.eu