SINCE 1977

R01

Explosion Drawing
Desenho de Explosão



ESPRESSO COFFEE MACHINE • MÁQUINA CAFÉ ESPRESSO

COMPASS 2 MB WHITE
COMPASS 2 MB BLACK

COMPASS 2 MB TC WHITE
COMPASS 2 MB TC BLACK

20210317

Management System ISO 9001:2015
TÜVRheinland CERTIFIED
www.tuv.com ID 9108624282

www.fiamma.pt

This drawing may be altered without previous notice.
Os elementos deste desenho podem ser alterados sem aviso prévio.

MB „Restoranų įranga“ · Vito Gerulaičio 1-59, LT-08200 Vilnius · +370 614 89888 · info@restoranu.eu · www.restoranu.eu

MÁQ. CAFÉ COMPASS 2 MB

ESPRESSO COFFEE MACHINE COMPASS 2 MB

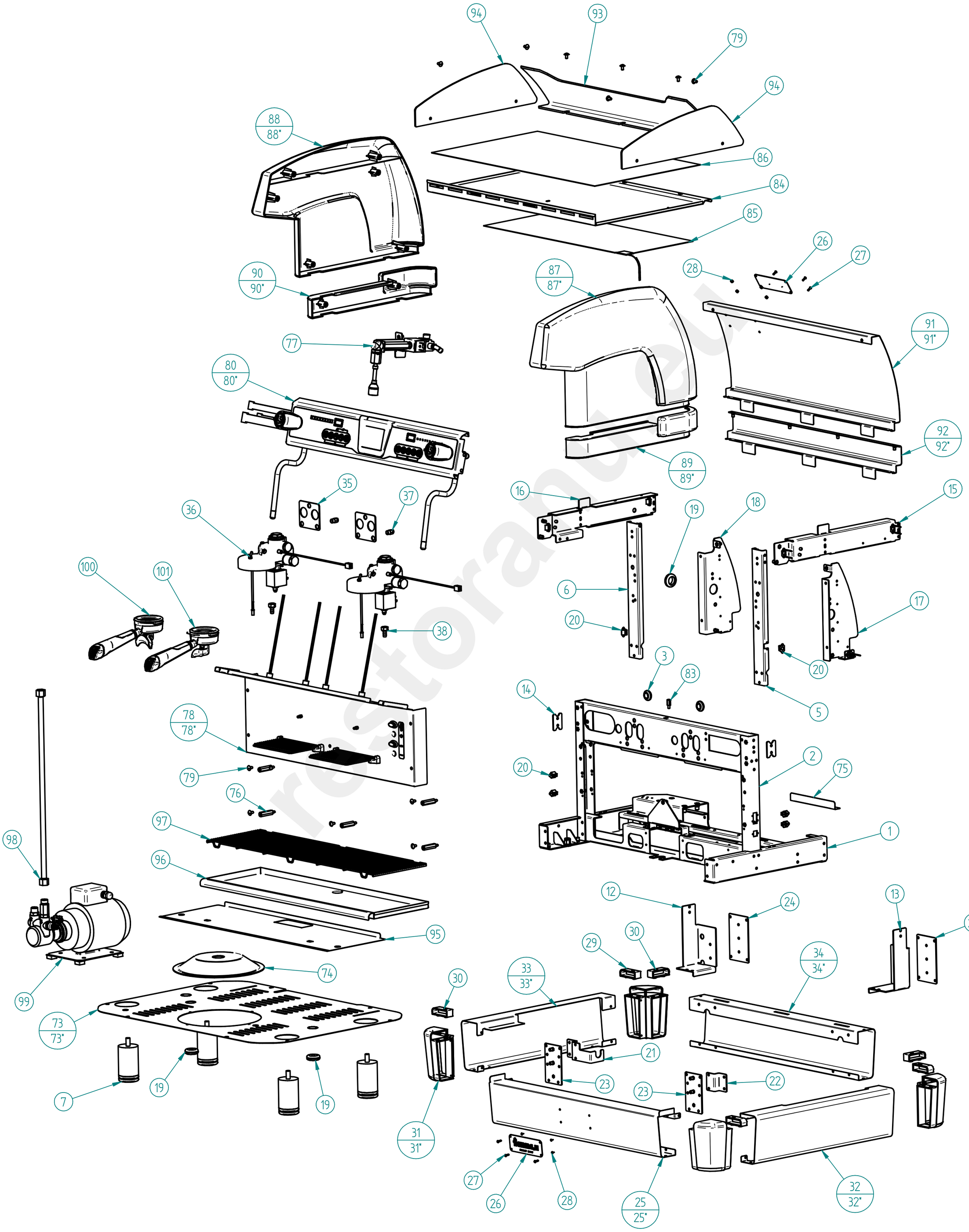

restoranu.eu

fiamma · RST · TÜVRheinland CERTIFIED Management System ISO 9001:2015 www.tuv.com ID 9108624282

www.fiamma.pt

This drawing may be altered without previous notice.
Os elementos deste desenho podem ser alterados sem aviso prévio.

MÁQ. CAFÉ COMPASS 2 MB

ESPRESSO COFFEE MACHINE COMPASS 2 MB

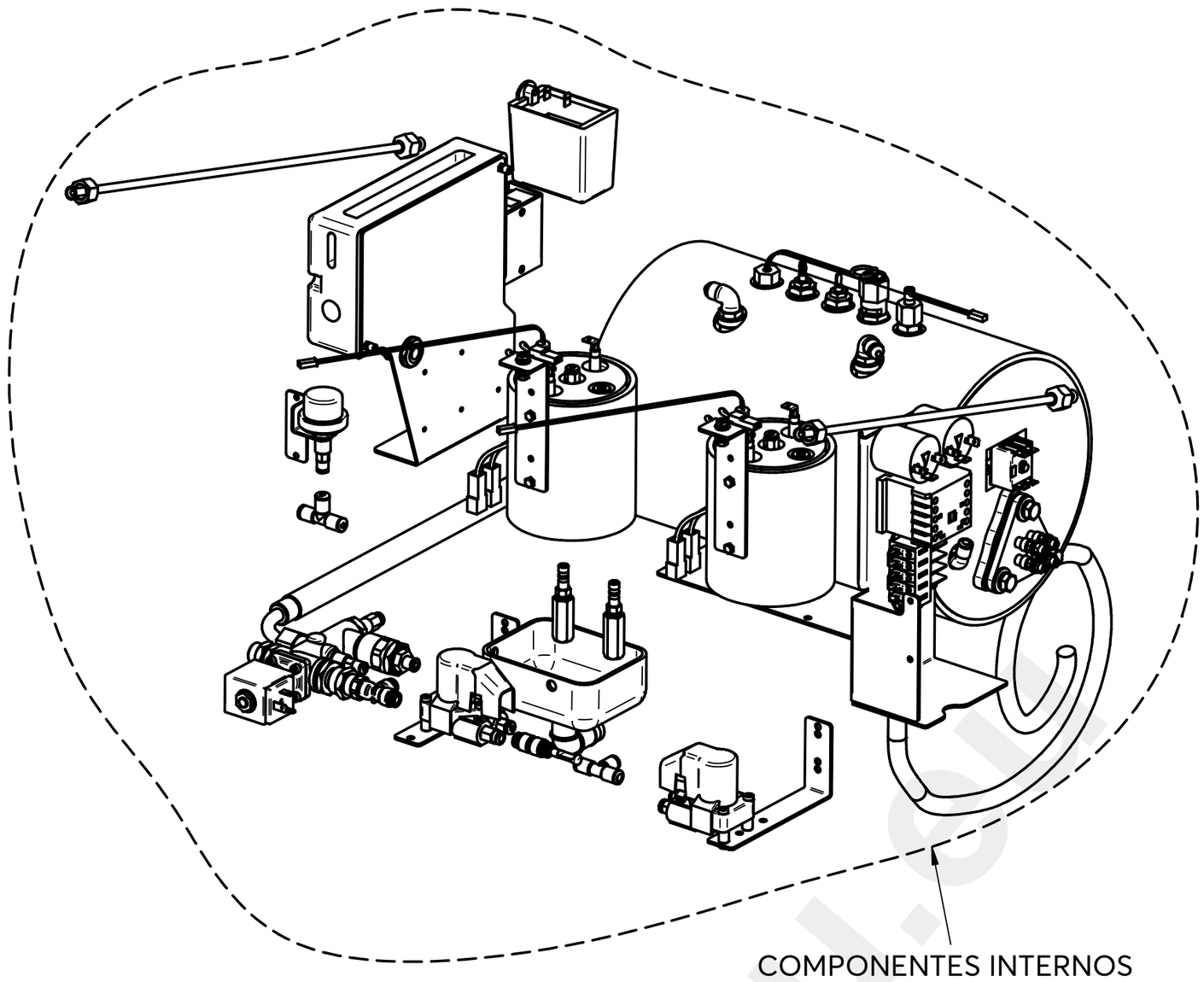

COMPONENTES INTERNOS
(INTERNAL COMPONENTS)

COMPONENTES INTERNOS
(INTERNAL COMPONENTS)

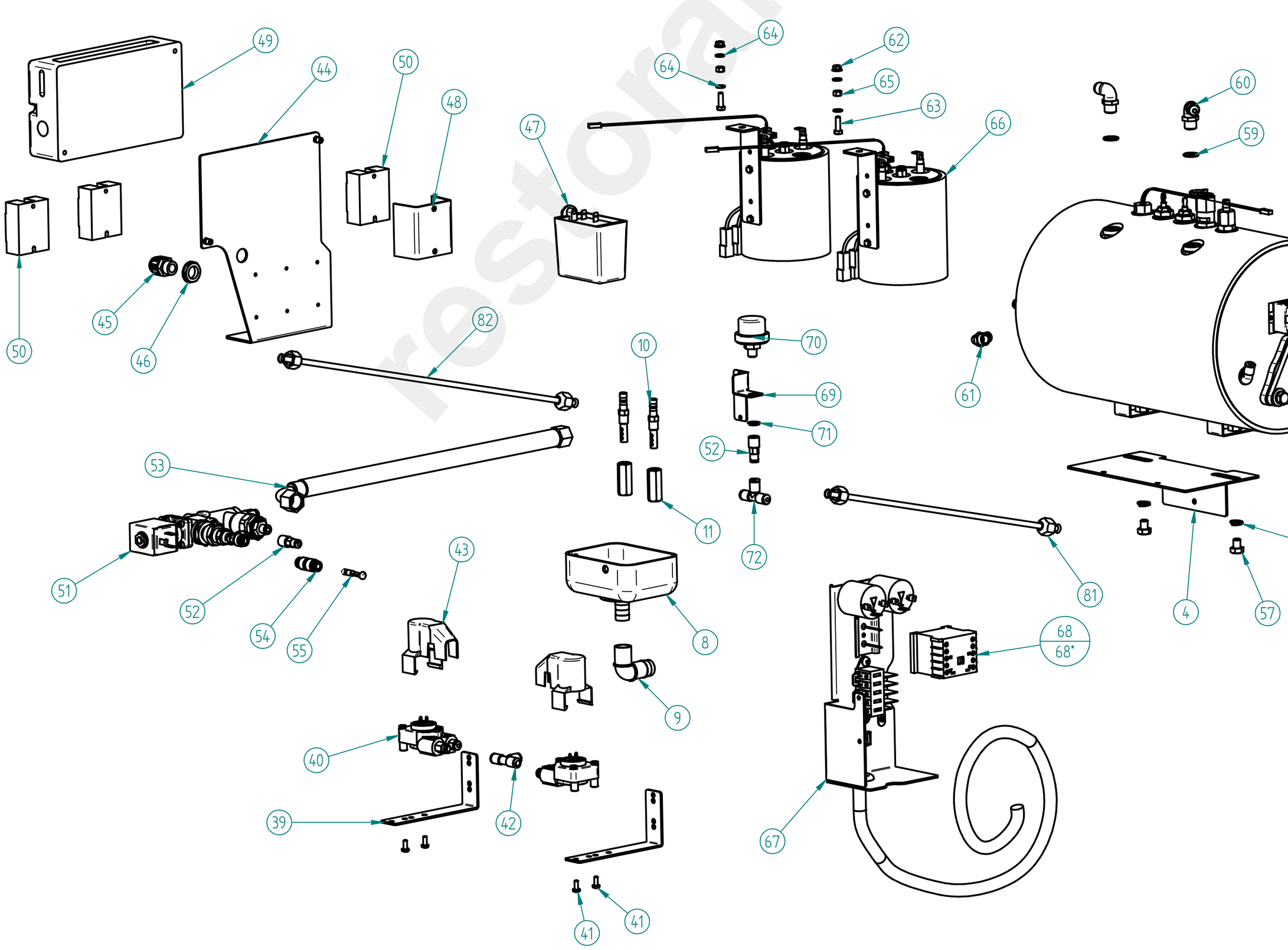

fiamma
RST
TÜVRheinland CERTIFIED
Management System ISO 9001:2015
www.tuv.com ID 9108624282
www.fiamma.pt
This drawing may be altered without previous notice.
Os elementos deste desenho podem ser alterados sem aviso prévio.

MÁQ. CAFÉ COMPASS 2 MB

ESPRESSO COFFEE MACHINE COMPASS 2 MB

LISTA DE COMPONENTES E ACESSÓRIOS

Spare parts list

ITEM Nº	CÓDIGO	DESIGNAÇÃO	DESIGNATION	QUANT.
1	7.0.017.5511	CHASSI HORIZONTAL ATLANTIC 2 ECC	HORIZONTAL CHASSIS ATLANTIC 2 ECC	1
2	7.0.017.5512	CHASSI VERTICAL ATLANTIC 2 ECC	VERTICAL CHASSIS ATLANTIC 2 ECC	1
3	4.0.007.0015	PASSA FIOS Nº3	WIRE PROTECTION Nº3	2
4	7.0.007.0024	APOIO CALDEIRA COMPASS 2	BOILER SUPPORT COMPASS 2	1
5	7.0.016.1055	CANTO POSTERIOR DIR. ATLANTIC NV	RIGHT REAR SUPPORT ATLANTIC NV	1
6	7.0.016.1054	CANTO POSTERIOR ESQ. ATLANTIC NV	LEFT REAR SUPPORT ATLANTIC NV	1
7	4.0.000.0801	PE MAQ. DE CAFE 50X80	FEET FOR COFFE MACHINE 50X80	4
8	4.0.000.0840	DEPOSITO ESGOTO PLASTICO	DRAIN TRAY	1
9	4.0.000.0845	RACORD L DEPOSITO ESGOTO PLASTICO	ANGLE RACORD	1
10	4.0.000.0195	RACORD CAMPANULA DESCARGA GRUPO	INNER RACORD OF THE DRAINAGE ASSEMBLY	2
11	4.0.000.0190	CAMPANULA DESCARGA GRUPO	OUTER RACORD OF THE DRAINAGE ASSEMBLY	2
12	7.0.007.0017	FIXADOR PAINEL POST. INF. ESQ. COMPASS	LEFT REAR PANEL LOWER FASTENER	1
13	7.0.007.0016	FIXADOR PAINEL POST. INF. DIR. COMPASS	RIGHT REAR PANEL LOWER FASTENER	1
14	7.0.016.5519	CHAPA COMPENSAÇÃO CHASSI VERT. ATLANTIC ECC	COMPENSATION PLATE VERT. CHASSIS ATLANTIC ECC	2
15	7.0.007.0064	SUPORTE PAINEL LAT. SUP. DIR. COMPASS	UPPER RIGHT SIDE PANEL SUPPORT COMPASS	1
16	7.0.007.0065-A	SUPORTE PAINEL LAT. SUP. ESQ. COMPASS	UPPER LEFT SIDE PANEL SUPPORT COMPASS	1
17	7.0.007.0021	SUPORTE PAINEL POST. DIR. COMPASS	RIGHT REAR PANEL SUPPORT COMPASS	1
18	7.0.007.0022	SUPORTE PAINEL POST. ESQ. COMPASS	LEFT REAR PANEL SUPPORT COMPASS	1
19	4.0.000.0372	PASSA FIOS P/ FURO ø25MM	WIRE PROTECTION	3
20	4.0.025.0085	MOLA FIXADORA PAINEL LAT.	FIXER SPRING	6
21	7.0.007.0012	FIXADOR PAINEL FRONTAL INF. / BLOCO COMPASS	FRONT PANEL LOWER FASTENER	1
22	7.0.007.0011	FIXADOR PAINEL FRONTAL INF. COMPASS	FRONT PANEL LOWER FASTENER	1
23	7.0.007.0010	REFORÇO PAINEL FRONTAL INF. COMPASS	FRONT PANEL LOWER SUPPORT	2
24	7.0.007.0015	REFORCO PAINEL POST. INF. COMPASS	REAR PANEL LOWER COMPASS	2
25	7.0.007.0540-A	PAINEL FRONTAL INF. C/ FUROS COMPASS 2 WHITE	FRONT WHITE PANEL LOWER COMPASS 2	1
26	4.0.000.0830	ETIQUETA INOX FIAMMA C/ FUROS	FIAMMA STAINLESS STEEL LABEL W/ HOLES	2
27	4.2.000.9618	PARAFUSO CAB. OVAL UMBR. M3X10 INOX	SCREW M3x10	8
28	4.2.000.9170	PORCA M3 ZINC. DIN934	M3 NUT ZINC. DIN934	8
29	4.0.007.0004	POSTIÇO 1 CANTO COMPASS	CORNER INSERT 1 COMPASS	3
30	4.0.007.0005	POSTIÇO 2 CANTO COMPASS	CORNER INSERT 2 COMPASS	3
31	4.0.007.0091-A	CANTO COMPASS WHITE	CORNER COMPASS WHITE	4
32	7.0.007.0505	PAINEL LATERAL INF. DIR. COMPASS WHITE	LOWER RIGHT SIDE PANEL COMPASS WHITE	1
33	7.0.007.0510	PAINEL LATERAL INF. ESQ. COMPASS WHITE	LOWER LEFT SIDE PANEL COMPASS WHITE	1
34	7.0.007.0515	PAINEL POSTERIOR INF. COMPASS 2 WHITE	LOWER REAR PANEL COMPASS 2 WHITE	1
35	4.0.028.0002	JUNTA GRUPO ECC-07	ECC-07 GROUP GASKET	2
36	7.0.028.1153-B	GRUPO ECC-07 C/ RESIST. CONJ.	ECC-07 GROUP W/RESIST.	2
37	4.0.000.0100	RACORD G1/8 TUBO TEFLON ø4	ø4 G1/8 TEFLON TUBE RACORD	2
38	4.0.000.0198	RACORD DESCARGA ELECTROVALVULA	ELECTROVALVE DRAINAGE RACCORD	2
39	7.0.007.0207	SUPORTE CONTADOR VOL. COMPASS MB	VOLUMETRIC DOSER SUPPORT	2
40	PRE-MONTAGEM	CONTADOR VOLUMETRICO CONJ. COMPASS MB	VOLUMETRIC COUNTER ASS. COMPASS MB	2
41	4.2.000.9055	PARAFUSO CAB. PH M4X10 ZINC. DIN7985	ZINC-PLATED PHILLIPS HEAD SCREW M4X10	4
42	4.0.000.0112	RACORD T TUBO TEFLON ø6	ø6 TEFLON TUBE T RACORD	1
43	5.0.000.1013	BLINDAGEM CONTADOR VOLUMETRICO	SHIELD VOLUMETRIC DOSER	2
44	7.0.007.0531	SUP. UNIDADE ELECTRONICA E RELES COMPASS MB	ELECTRONIC UNIT SUPPORT COMPASS MB	1
45	4.0.180.0040	CERRA CABOS P/ FURO Ø15,5	CABLE CLAMP (Ø15,5 HOLE)	1
46	4.0.180.0042	PORCA CERRA CABOS P/ FURO Ø15,5	CABLE CLAMP NUT (Ø15,5 HOLE)	1
47	4.0.000.0885	FONTE ALIMENTAÇAO 100-127VAC/24VDC-10W_200-240VAC/24VDC-20W	100-127VAC/24VDC-10W_200-240VAC/24VDC-20W POWER SUPPLY	1
48	7.0.007.0030	DISSIPADOR RELE ESTATICO	RELAY HEATSINK	1
49	4.0.000.0880	UNIDADE ELECTRONICA CONCERTO TRIAC RST 230V	CONCERTO TRIAC CONTROL BOX 230V (RST)	1
50	4.0.000.0991	RELE ESTATICO 25A	25A SOLID STATE RELAY	3
51	7.0.007.0142	BLOCO ENTRADA AGUA CONJ. NV COMPASS	WATER INLET ASS. COMPASS	1
52	4.0.000.0101	RACORD G1/8F TUBO TEFLON ø4	ø4 G1/8F TEFLON TUBE RACORD	2
53	4.0.000.0818	TUBO ALIMENTAÇÃO C/ CURVA 1500MM	WATER INLET PIPE 1500MM	1
54	4.0.000.0097	CONECTOR RAPIDO TUBO ø6	FAST TUBE CONNECTOR ø6	1
55	4.0.000.0093	TAMPAO TUBO ø6	TUBE COVER ø6	1
56	PRÉ.MONTAGEM	CALDEIRA 10,5LT MB C/ PERM. E ACESS.	10,5LT MB BOILER W/ EXCHANGER W/ ACESS.	1
57	4.2.000.9097	PARAFUSO CAB. SEXT. M8X10 ZINC. DIN933	SCREW M8X10	2
58	4.2.000.9147	ANILHA MOLA M8 ZINC. DIN127B	M8 SPRING WASHER	2
59	4.0.000.0013	ANILHA 13x17MM (G1/4) COBRE	GASKET G1/4 CU	2
60	4.0.000.0085	RACORD INJECÇÃO	INJECTION RACORD	2

Management System ISO 9001:2015 TÜVRheinland CERTIFIED www.tuv.com ID 9108624282

www.fiamma.pt

This drawing may be altered without previous notice.
Os elementos deste desenho podem ser alterados sem aviso prévio.

MÁQ. CAFÉ COMPASS 2 MB

ESPRESSO COFFEE MACHINE COMPASS 2 MB

LISTA DE COMPONENTES E ACESSÓRIOS
Spare parts list

ITEM Nº	CÓDIGO	DESIGNAÇÃO	DESIGNATION	QUANT.
61	4.0.000.0109	RACORD L G1/4 TUBO TEFLON ø6	ø6 G1/4 TEFLON TUBE L RACORD	1
62	4.2.000.9180	PORCA M5 ZINC. C/ RECART. DIN6923	M5 NUT ZINC. DIN6923	2
63	4.2.000.9072	PARAFUSO CAB. SEXT. M5X16 ZINC. DIN933	SREW M5X16	2
64	4.2.000.9136	ANILHA RECART. M5 ZINC DIN933	ZINC-PLATED TOOTHED WASHER M5 DIN6798A	4
65	4.2.000.9172	PORCA M5 ZINC. DIN934	M5 NUT ZINC. DIN934	2
66	7.0.007.0147	CALDEIRA INOX 0,5LT 1500W CONJ. NV COMPASS MB	1500W 0,5L S/ STEEL BOILER ASS.	2
67	7.0.007.0111	CABO H07RN-F 5G4-1,8MT CONJ. COMPASS 3	FEEDING CABLE H07RN-F 5G4-1,8MT ASS. COMPASS 3	1
68	4.0.091.0003	CONTACTOR 22A-AC1 BOBINE 230V	CONTACTOR 22A-AC1 230V	1
69	7.0.007.0555	SUPORTE SENSOR DE PRESSAO 16 BAR G1/8	SUPPORT SENSOR PRESSURE 16BAR G1/8	1
70	4.0.007.0024	SENSOR DE PRESSÃO G1/8, 0-16BAR	PRESSURE SENSOR G1/8, 0-16BAR	1
71	5.0.025.3193	ANILHA 10X15MM (G1/8) COBRE	COPPER WASHER 10X15MM (G1/8)	1
72	4.0.000.0114	RACORD T TUBO TEFLON ø4	ø4 TEFLON TUBE T RACORD	1
73	7.0.007.0293	BLINDAGEM FUNDO NV COMPASS 2 TC	BOTTOM SHIELD NV COMPASS 2 TC	1
74	4.0.007.0207	SAIDA BLINDAGEM FUNDO COMPASS TC	EXIT BOTTOM SHIELD COMPASS TC	1
75	7.0.007.0270	PROTECÇAO INTERRUPTOR GERAL COMPASS TC	SWTICH PROTETION COMPASS TC	1
76	4.0.028.0070	SEPARADOR BLINDAGEM ELECTROV. GRUPOS	SHIELD GROUP SEPARATOR	5
77	7.0.007.0107	TORNEIRA AGUA MISTURADORA COMPASS	WATER MIXER TAP PACIFIC MB	1
78	PRE-MONTAGEM	PM_PAINEL FRONTAL COMPASS 2 MB TC	FRONT PANEL COMPASS 2 MB TC	1
79	4.2.000.9116	PARAFUSO CAB. OVAL LARGA M5X10 NIQ	SCREW M5X10	12
80	PRE-MONTAGEM	PM_PAINEL COMANDO SUPERIOR CONJ. COMPASS 2 MB	UPPER CONTROL PANEL COMPASS 2 MB	1
81	7.0.007.0095	TUBO CALDEIRA TORN. VAPOR DIR. COMPASS	STEAM BOILER RIGHT TAP TUBE COMPASS	1
82	7.0.028.1106	TUBO TORNEIRA VAPOR ESQ. PACIFIC 2 MB	LEFT STEAM TAP TUBE PACIFIC 2 MB	1
83	4.0.007.0205	SEPARADOR TABULEIRO SUPERIOR COMPASS TC	UPPER TRAY SEPARATOR COMPASS TC	1
84	7.0.007.0086	TABULEIRO SUPERIOR COMPASS 2 NV2	UPPER TRAY COMPASS 2	1
85	5.0.000.0809-A	RESIST. ESCALDA CHAV. 530X230MM 75W 230V	HEATING ELEMENT FOR CUP HEATING	1
86	7.0.007.0089	GRELHA REDE 620X360	WIRE MESH GRID 620X360	1
87	4.0.007.0081	PAINEL LATERAL DIR. COMPASS WHITE	RIGHT SIDE PANEL COMPASS WHITE	1
88	4.0.007.0085	PAINEL LATERAL ESQ. COMPASS WHITE	LEFT SIDE PANEL COMPASS WHITE	1
89	4.0.007.0281	PAINEL LATERAL DIR. COMPASS TC WHITE	RIGHT SIDE PANEL COMPASS TC WHITE	1
90	4.0.007.0285	PAINEL LATERAL ESQ. COMPASS TC WHITE	LEFT SIDE PANEL COMPASS TC WHITE	1
91	7.0.007.0545	PAINEL POSTERIOR C/ FUROS COMPASS 2 WHITE	REAR PANEL W/ HOLES COMPASS 2 WHITE	1
92	7.0.007.0525	PAINEL POSTERIOR COMPASS 2 TC WHITE	REAR PANEL COMPASS 2 TC WHITE	1
93	4.0.007.0011	ACRILICO POSTERIOR COMPASS 2	REAR ACRYLIC COMPASS 2	1
94	4.0.007.0009	ACRILICO LATERAL DIR. COMPASS	ACRYLIC RIGHT SIDE COMPASS	2
95	7.0.007.0080	BLINDAGEM INFERIOR TAB. INF. COMPASS 2	COMPASS 2 LOWER TRAY SHIELDING	1
96	7.0.007.0081	TABULEIRO INFERIOR COMPASS 2	LOWER TRAY COMPASS 2	1
97	4.0.007.0150	GRELHA TABULEIRO INF. ARAME COMPASS 2	WIRE TRAY GRID COMPASS 2	1
98	4.0.000.0819	TUBO ALIMENTAÇÃO 800 MM	WATER INLET PIPE 800MM	1
99	7.0.007.0128-A	PM_MOTOR EXTERIOR BOMBA CONJ. RPM	EXTERNAL MOTOR PUMP	1
100	5.0.000.0630	PORTA FILTRO INOX CONJ. RST BRANCO - 2 BICAS	FILTER HOLD. REINF. ASSEMB. RST WHITE - 2 COFFEE CUP	2
101	5.0.000.0627-A	PORTA FILTRO INOX CONJ. RST BRANCO - 1 BICA	FILTER HOLD. REINF. ASSEMB. RST WHITE - 1 COFFEE CUP	1

MODELO 208-240V/60HZ / *MODEL 208-240V/60HZ*

ITEM Nº	CÓDIGO	DESIGNAÇÃO	DESIGNATION	QUANT.
68*	4.0.091.0001	CONTACTOR 22A-AC1 BOBINE 208V	CONTACTOR 22A-AC1 COIL 208V	1

MODELO IOT / *IOT MODEL*

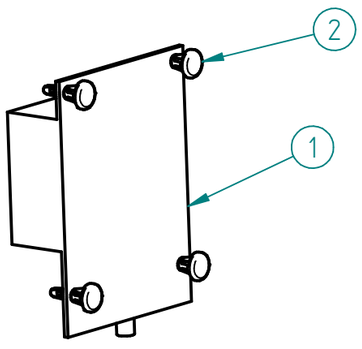

ITEM Nº	CÓDIGO	DESIGNAÇÃO	DESIGNATION	QUANT.
1	4.0.000.0978	PLACA ELECTRONICA IOT	IOT ELECTRONIC UNIT	1
2	4.0.000.0915	ESPAÇADOR PLASTICO 6,4MM	PLASTIC SPACER 6,4MM	4

Management System ISO 9001:2015
TÜVRheinland CERTIFIED
www.tuv.com ID 9108624282

www.fiamma.pt

This drawing may be altered without previous notice.
Os elementos deste desenho podem ser alterados sem aviso prévio.

MÁQ. CAFÉ COMPASS 2 MB

ESPRESSO COFFEE MACHINE COMPASS 2 MB

LISTA DE COMPONENTES E ACESSÓRIOS OUTRAS VERSÕES

Spare parts list other versions

ITEM Nº	CÓDIGO	DESIGNAÇÃO	DESIGNATION	MOD./MODEL	QUANT.
*25**	*7.0.007.0541-A*	*PAINEL FRONTAL INF. C/ FUROS COMPASS 2 BLACK*	*FRONT BLACK PANEL LOWER COMPASS 2*	*MAQ. CAFE COMPASS 2 MB BLACK / MAQ. CAFE COMPASS 2 MB TC BLACK*	*1*
*31**	*4.0.007.0092-A*	*CANTO COMPASS BLACK*	*CORNER COMPASS BLACK*	*MAQ. CAFE COMPASS 2 MB BLACK / MAQ. CAFE COMPASS 2 MB TC BLACK*	*4*
*32**	*7.0.007.0506*	*PAINEL LATERAL INF. DIR. COMPASS BLACK*	*LOWER RIGHT SIDE PANEL COMPASS BLACK*	*MAQ. CAFE COMPASS 2 MB BLACK / MAQ. CAFE COMPASS 2 MB TC BLACK*	*1*
*33**	*7.0.007.0511*	*PAINEL LATERAL INF. ESQ. COMPASS BLACK*	*LOWER LEFT SIDE PANEL COMPASS BLACK*	*MAQ. CAFE COMPASS 2 MB BLACK / MAQ. CAFE COMPASS 2 MB TC BLACK*	*1*
*34**	*7.0.007.0516*	*PAINEL POSTERIOR INF. COMPASS 2 BLACK*	*LOWER REAR PANEL COMPASS 2 BLACK*	*MAQ. CAFE COMPASS 2 MB BLACK / MAQ. CAFE COMPASS 2 MB TC BLACK*	*1*
73*	7.0.007.0091	BLINDAGEM FUNDO COMPASS 2	BOTTOM SHIELD COMPASS 2	MAQ. CAFE COMPASS 2 MB WHITE / MAQ. CAFE COMPASS 2 MB BLACK	
*78**	*PRÉ-MONTAGEM*	*PM_PAINEL FRONTAL COMPASS 2 MB*	*FRONT PANEL COMPASS 2 MB*	*MAQ. CAFE COMPASS 2 MB WHITE / MAQ. CAFE COMPASS 2 MB BLACK*	*1*
*80**	*PRÉ-MONTAGEM*	*PM_PAINEL COMANDO SUPERIOR CONJ. COMPASS 2 MB*	*UPPER COMMAND PANEL ASS. COMPASS 2 MB*	*MAQ. CAFE COMPASS 2 MB WHITE / MAQ. CAFE COMPASS 2 MB BLACK / MAQ. CAFE COMPASS 2 MB TC BLACK*	*1*
*87**	*4.0.007.0082-A*	*PAINEL LATERAL DIR. COMPASS BLACK*	*RIGHT SIDE PANEL COMPASS BLACK*	*MAQ. CAFE COMPASS 2 MB BLACK / MAQ. CAFE COMPASS 2 MB TC BLACK*	*1*
*88**	*4.0.007.0086-A*	*PAINEL LATERAL ESQ. COMPASS BLACK*	*LEFT SIDE PANEL COMPASS BLACK*	*MAQ. CAFE COMPASS 2 MB BLACK / MAQ. CAFE COMPASS 2 MB TC BLACK*	*1*
*89**	*4.0.007.0282*	*PAINEL LATERAL DIR. COMPASS TC BLACK*	*RIGHT SIDE PANEL COMPASS TC BLACK*	*MAQ. CAFE COMPASS 2 MB TC BLACK*	*1*
*90**	*4.0.007.0286*	*PAINEL LATERAL ESQ. COMPASS TC BLACK*	*LEFT SIDE PANEL COMPASS TC BLACK*	*MAQ. CAFE COMPASS 2 MB TC BLACK*	*1*
*91**	*7.0.007.0546*	*PAINEL POSTERIOR C/ FUROS COMPASS 2 BLACK*	*REAR PANEL W/ HOLES COMPASS 2 BLACK*	*MAQ. CAFE COMPASS 2 MB BLACK / MAQ. CAFE COMPASS 2 MB TC BLACK*	*1*
*92**	*7.0.007.0526*	*PAINEL POSTERIOR COMPASS 2 TC BLACK*	*REAR PANEL COMPASS 2 TC BLACK*	*MAQ. CAFE COMPASS 2 MB TC BLACK*	*1*

36 - 7.0.028.1153-B - GRUPO ECC-07 C/ RESIST. CONJ.

36 - ECC-07 GROUP W/ RESIST.

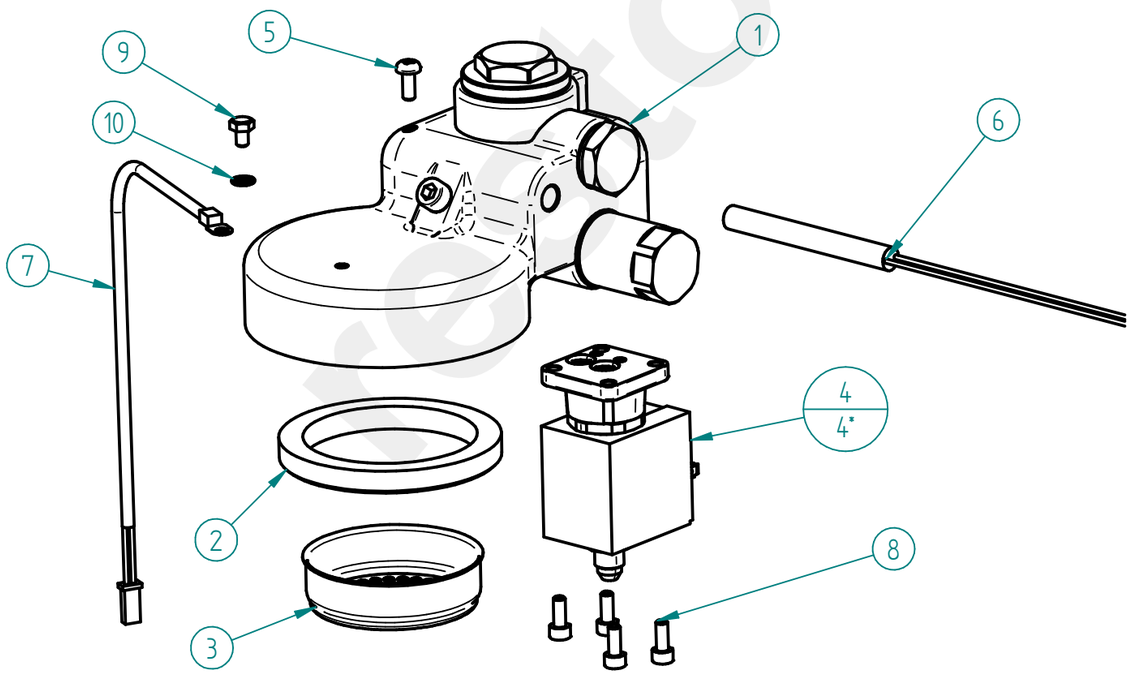

ITEM Nº	CÓDIGO	DESIGNAÇÃO	DESIGNATION	QUANT.
1	4.0.028.0000	GRUPO ECC-07 C/ RESIST.	ECC-07 GROUP W/ RESIST.	1
2	5.0.025.0012	JUNTA PORTA FILTRO 58X74X8,5MM (GR B-61/ECC-07)	FILTER HOLDER GASKET	1
3	5.0.025.0041	CRIVO GRUPO NANOTECH	GROUP SHOWER SCREEN NANOTECH	1
4	5.0.000.1130	ELECTROVALVULA 3 VIAS 230V C/ ORING - BASE LATAO	ELECTROVALVE 3 WAYS 230V W/ ORING - BRASS BASE	1
5	4.2.000.9055	PARAFUSO CAB. PH M4X10 ZINC. DIN7985	ZINC-PLATED PHILLIPS HEAD SCREW M4X10	1
6	4.0.028.0060	RESISTENCIA CARTUCHO ø8 150W-230V	CARTRIDGE HEAT. ELEM. Ø8 150W 230V W/TERM.	1
7	4.0.000.0940	SONDA TEMPERATURA Ø4,25	TEMPERATURE PROBE Ø4,25	1
8	5.0.000.0575	PARAF. UMBRACO M4X10 INOX DIN912	M4X10 INOX DIN912 UMBRACO SCREW	4
9	4.2.000.9061	PARAFUSO CAB. SEXT. M4X6 NIQ. DIN933	M4X6 NIQ. DIN933 HEX HEAD SREW	1
10	4.2.000.9135	ANILHA RECART. M4 ZINC. DIN6798A	ZINC-PLATED TOOTHED WASHER M4 DIN6798A	1

Management System ISO 9001:2015 TÜVRheinland CERTIFIED www.tuv.com ID 9108624282

www.fiamma.pt

This drawing may be altered without previous notice.
Os elementos deste desenho podem ser alterados sem aviso prévio.

MÁQ. CAFÉ COMPASS 2 MB

ESPRESSO COFFEE MACHINE COMPASS 2 MB

MODELO 208-240V/60HZ / *MODEL 208-240V/60HZ*

36- 7.0.028.1152 -B- GRUPO ECC-07 C/ RESIST. CONJ. 208-240V/60Hz

36 - ECC-07 GROUP W/ HEATING ELEMENT ASSEMB. 208-240V/60Hz

ITEM Nº	CÓDIGO	DESIGNAÇÃO	DESIGNATION	QUANT.
4*	5.0.000.1130	ELECTROVALVULA 3 VIAS 230V C/ ORING - BASE LATAO	ELECTROVALVE 3 WAYS 230V W/ ORING - BRASS BASE	1

1 - 4.0.028.0000 - GRUPO ECC-07 C/ RESIST.

1 - ECC-07 GROUP W/ RESIST.

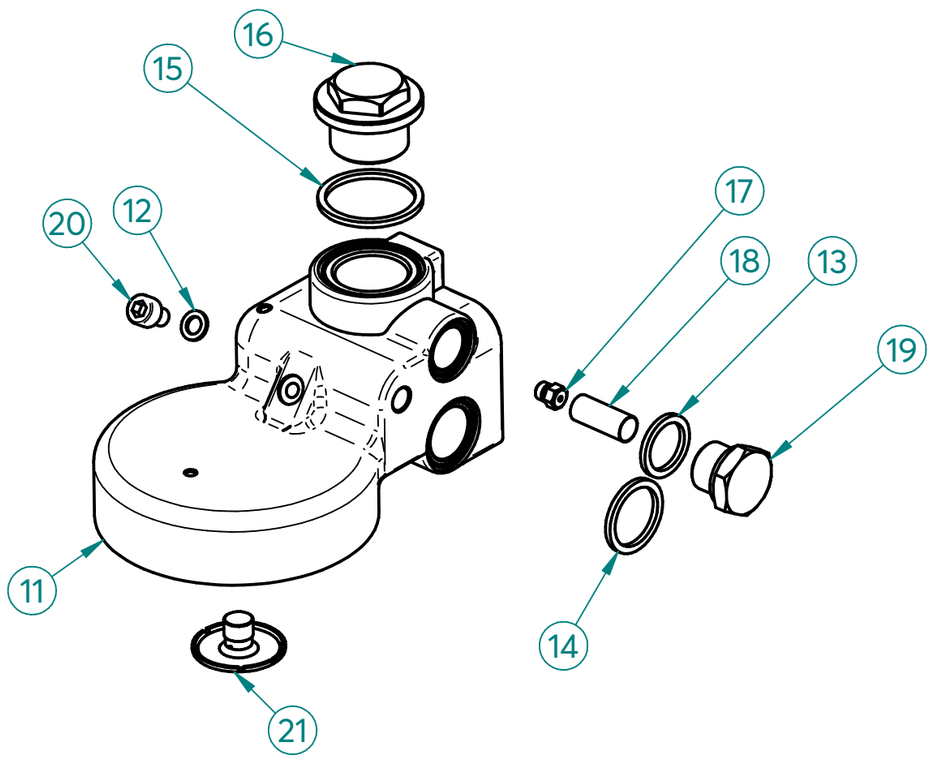

ITEM Nº	CÓDIGO	DESIGNAÇÃO	DESIGNATION	QUANT.
11	5.0.028.0100	CORPO GRUPO MB	BODY OF THE GROUP MB	1
12	5.0.025.0015	JUNTA TEFLON 10X6X1	TEFLON GASKET	1
13	5.0.025.0022	JUNTA TEFLON 22X17X2	TEFLON GASKET	1
14	5.0.016.0106	JUNTA TEFLON 26X 21X2	TEFLON GASKET	1
15	5.0.025.0002	JUNTA TEFLON 35X30X2	TEFLON GASKET	1
16	5.0.016.0102	TAMPAO SUPERIOR M26X1,5 CROM. GR ECC-07	UPPER CHROM. COVER M26X1,5 (GR ECC-07)	1
17	5.0.016.0110	INJECTOR 0.7 M6X0,75 (GR ECC-07)	INJECTOR 0,7 M6X0,75 (GR ECC-07)	1
18	5.0.025.0023	FITRO INOX INJECTOR	GROUP GIGLEUR FILTER	1
19	5.0.025.0021	TAMPAO G3/8 CROM. (GR B-61/GR EC-07)	CHROM. COVER G3/8 (GR B-61/GR ECC-07)	1
20	5.0.025.0003	PARAFUSO UMBRACO M6X10 INOX (GR B-61/ECC-07)	FRONT INOX SCREW M6X10 OF THE GROUP B-61	1
21	5.0.025.0009	DISTRIBUIDOR GRUPO B-61/ECC-07	OUTLET GROUP B-61/ECC-07	1

40 - PM - CONTADOR VOLUMETRICO CONJ. COMPASS MB

40 - VOLUMETRIC DOSER ASS. COMPASS MB

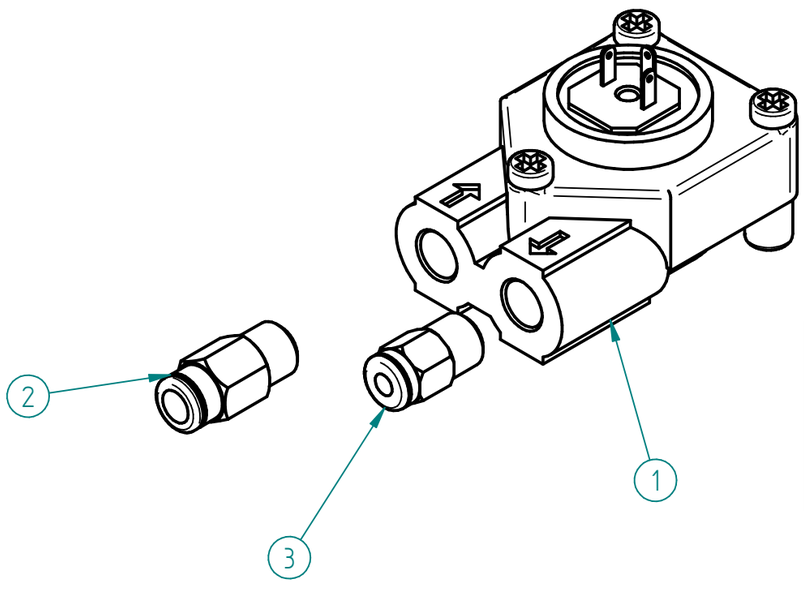

ITEM Nº	CÓDIGO	DESIGNAÇÃO	DESIGNATION	QUANT.
1	5.0.000.1012	CONTADOR VOLUMETRICO D1,15-G1/8 C/ LED	VOLUMETRIC DOSER D1,15-G1/8 W/ LED	1
2	4.0.000.0104	RACORD G1/8 TUBO TEFLON ø6	ø6 G1/8 TEFLON TUBE RACORD	1
3	4.0.000.0100	RACORD G1/8 TUBO TEFLON ø4	ø4 G1/8 TEFLON TUBE RACORD	1

restoranu

MÁQ. CAFÉ COMPASS 2 MB

ESPRESSO COFFEE MACHINE COMPASS 2 MB

51 - 7.0.007.0142 - BLOCO ENTRADA AGUA CONJ. NV COMPASS

51 - WATER INLET ASS. COMPASS

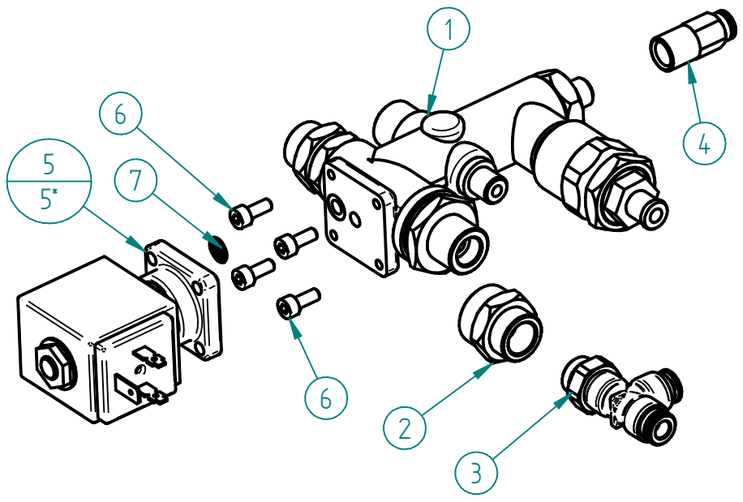

ITEM Nº	CÓDIGO	DESIGNAÇÃO	DESIGNATION	QUANT.
1	4.0.016.0010	BLOCO ENTRADA AGUA ECC-07 (AUT.)	WATER INLET ASS.	1
2	4.0.000.0116	RACORD G1/4F-G3/8F NIQ.	G1/4F-G3/8F NICKEL RACORD	1
3	4.0.000.0095	RACORD T LATERAL G1/4 TUBO ø6	T SIDE FITTING G1/4 - Ø6 PIPE	1
4	4.0.000.0110	RACORD G1/8F TUBO TEFLON ø6 INOX	STAINLESS STEEL FITTING G1/8F - ø6 PIPE	1
5	5.0.000.1124	ELECTROVALVULA 2 VIAS 230V - BASE LATAO	ELECTROVALVE 2 WAYS 230V - BRASS BASE	1
6	5.0.000.0575	PARAF. UMBRACO M4X10 INOX DIN912	M4X10 INOX DIN912 UMBRACO SCREW	4
7	5.0.000.0181	FILTRO BASE ELECTROVAL. Ø9MM	ELECTROVAL. FILTER Ø9MM	1

MODELO 208-240V/60HZ / *MODEL 208-240V/60HZ*

51 - 7.0.007.0143 - BLOCO ENTRADA AGUA CONJ. 208-240V/60Hz NV COMPASS

51 - WATER INLET ASSEMB. 208-240V/60Hz NV COMPASS

ITEM Nº	CÓDIGO	DESIGNAÇÃO	DESIGNATION	QUANT.
5*	5.0.000.0144	ELECTROVALVULA 2 VIAS 208-240V/60HZ (PARKER)-ENT. AGUA PARA	2WAY SOL.VALVE 208-240V/60HZ (PARKER)-PARAL. WATER INLET TAP	1

56 - PM-CALDEIRA 10,5 LT MB C/ PERM. E ACESS.

56 - 10,5 LT MB BOILER W/ EXCHANGER W/ ACESS.

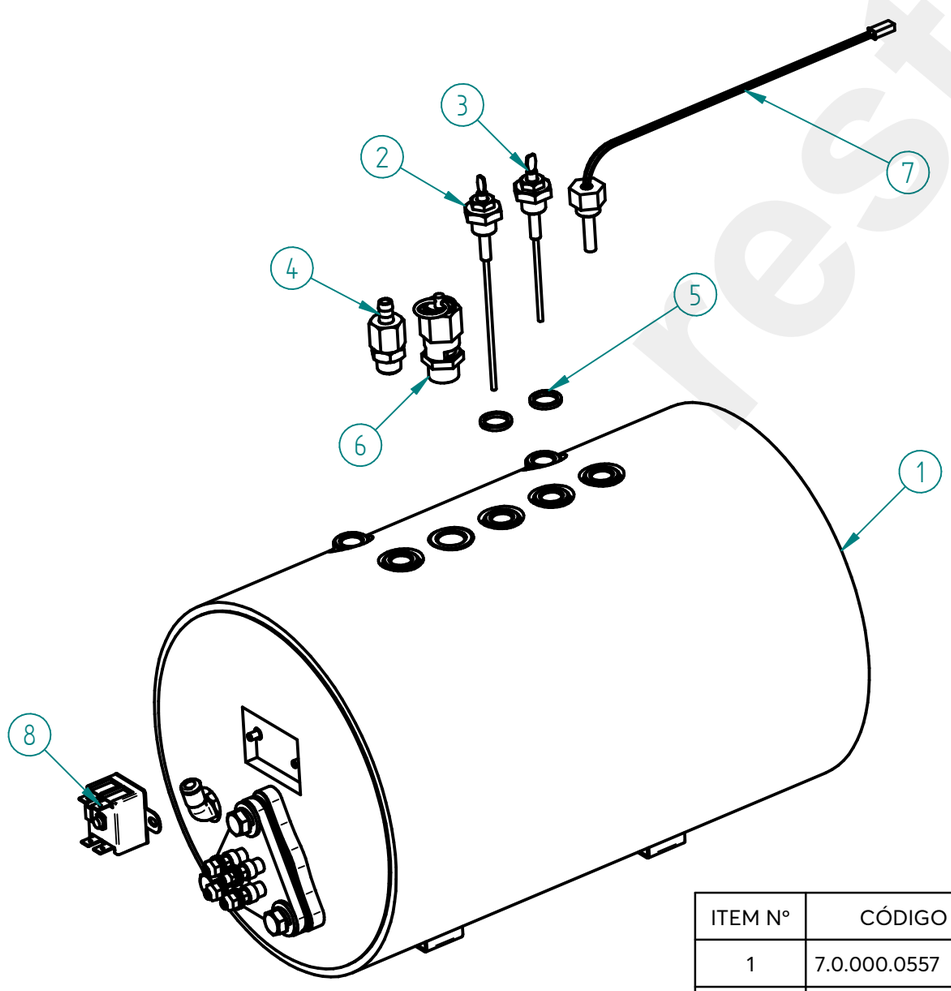

ITEM Nº	CÓDIGO	DESIGNAÇÃO	DESIGNATION	QUANT.
1	7.0.000.0557	CALDEIRA 10,5LT MB C/ PERM. E ACESS. TUB. COBRE	10,5LT MB BOILER W/ EXCHANGER W/ ACESS. COPPER TUBE	1
2	7.0.025.0002	SONDA ø2,5X135MM CONJ.	ø2,5X135MM PROBE ASS.	1
3	7.0.016.0070	SONDA ø2,5X105MM CONJ.	ø2,5X105MM PROBE ASS.	1
4	5.0.000.1002	VALVULA ANTI-VACUO	ANTI VACUUM VALVE	1
5	5.0.000.0315	JUNTA TEFLON 18X13,5X2MM	TEFLON GASKET	2
6	4.0.000.0051	VALVULA SEGURANÇA CALDEIRA	BOILER SECURITY VALVE	1
7	4.0.000.0941	SONDA TEMPERATURA G1/4-280MM	TEMPERATURE PROBE G1/4-280MM	1
8	4.0.000.0250	TERMOSTATO SEGURANÇA 130°	SAFETY THERMOSTAT 130°	1

restoranu.eu

MÁQ. CAFÉ COMPASS 2 MB

ESPRESSO COFFEE MACHINE COMPASS 2 MB

1 - 7.0.000.0557- CALDEIRA 10,5LT MB C/ PERM. E ACESS. TUB. COBRE

1 - 10,5LT MB BOILER W/ EXCHANGER W/ ACESS. COPPER TUBE

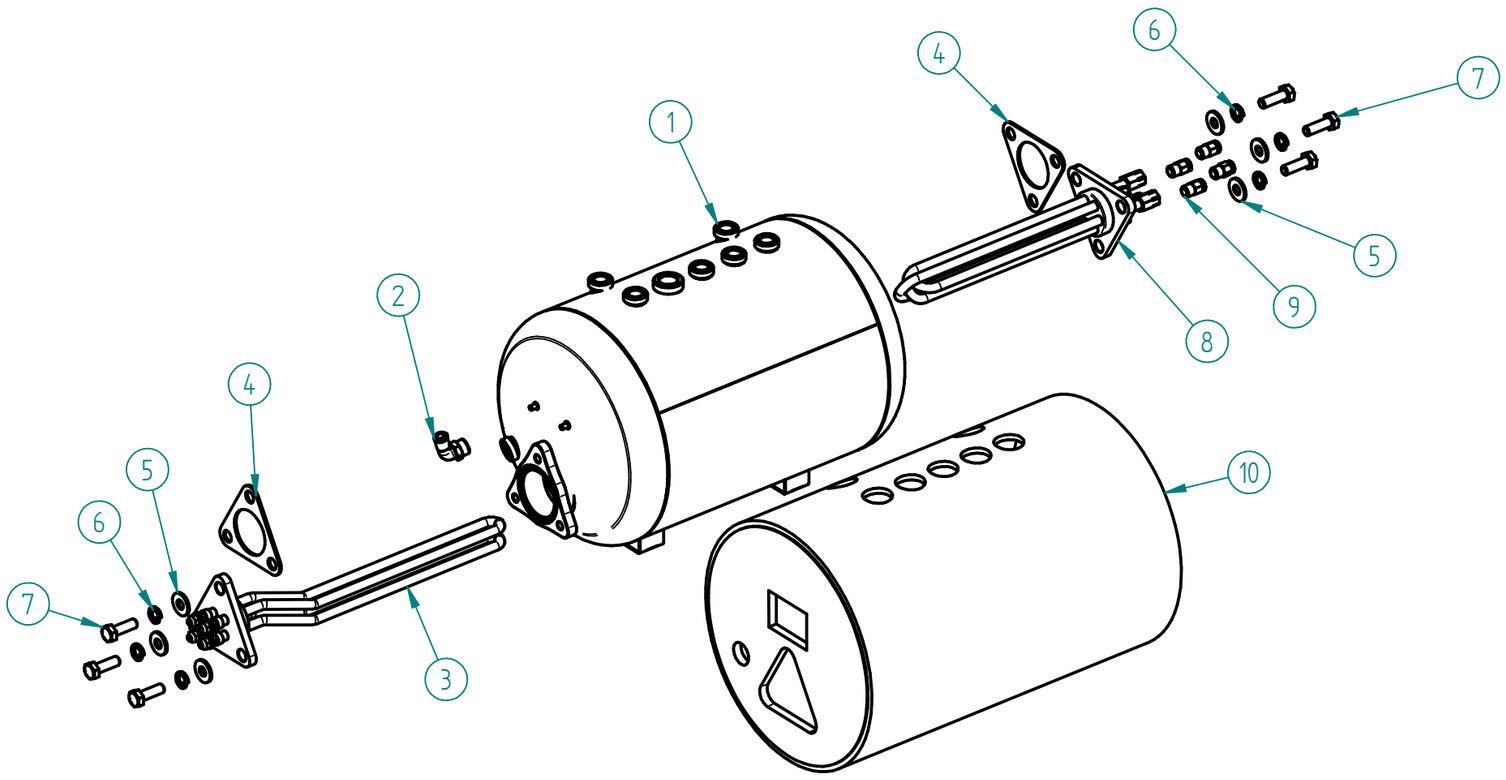

ITEM Nº	CÓDIGO	DESIGNAÇÃO	DESIGNATION	QUANT.
1	7.0.000.0551	CALDEIRA 10,5LT MB C/ PERMUTADOR	10,5LT MB BOILER WITH EXCHANGER	1
2	4.0.000.0109	RACORD L G1/4 TUBO TEFLON ø6	ø6 G1/4 TEFLON TUBE L RACORD	1
3	4.0.000.0221	RESISTENCIA FLANGE TRIANG. 3000W	TRIANGULAR HEATING ELEMENT (3000 W)	1
4	7.0.000.0010	JUNTA DA RESISTENCIA TRIANGULAR	TRIANGULAR HEAT. ELEMENT GASKET	2
5	7.2.000.0015	ANILHA PLANA 2X20X8,5 ZINC.	FLAT RING 2X20X8.5	6
6	4.2.000.9147	ANILHA MOLA M8 ZINC. DIN127B	M8 SPRING WASHER	6
7	4.2.000.9086	PARAFUSO CAB. SEXT. M8X25 ZINC. DIN933	ZINC-PLATED HEX. HEAD SCREW M8X25 DIN933	6
8	7.0.000.0582	PERMUTADOR C/ FLANGE TRIANGULAR	EXCHANGER W/TRIANG. FLANGE	1
9	4.0.000.0100	RACORD G1/8 TUBO TEFLON ø4	ø4 G1/8 TEFLON TUBE RACORD	4
10	4.0.000.0420	ISOLAMENTO CALDEIRA 10,5LT MB	BOILER INSULATION 10,5LT	1

66 - 7.0.007.0147 - CALDEIRA INOX 0,5LT 1500W CONJ. NV COMPASS MB

66 - 1500W 0,5L S/ STEEL BOILER ASS.

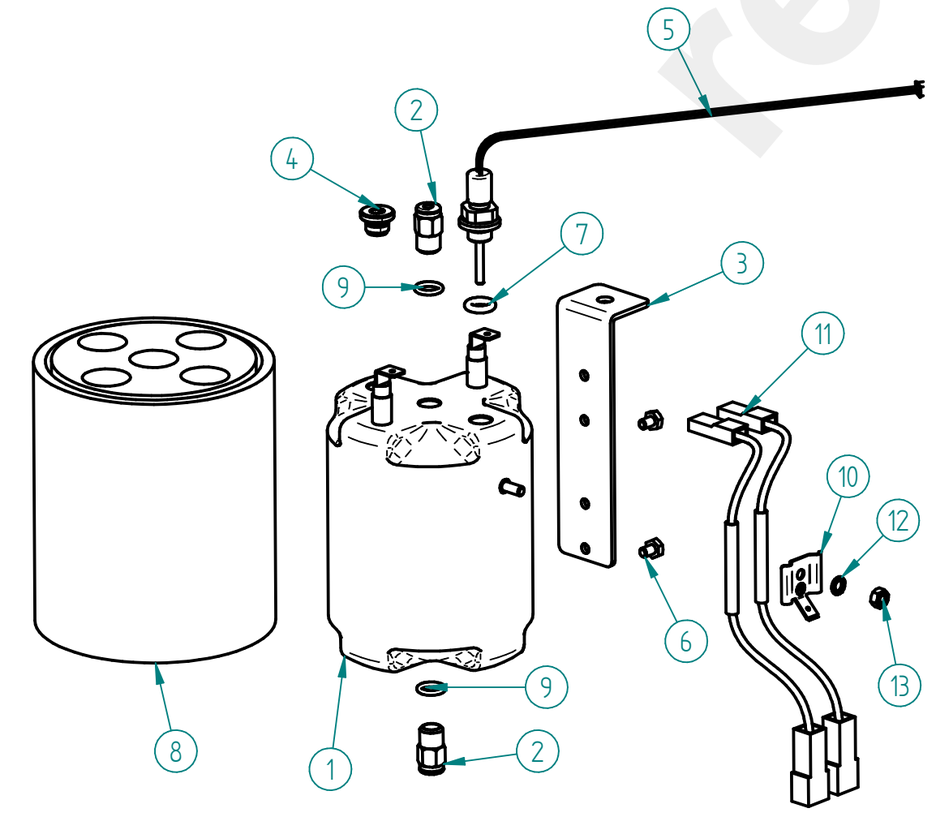

ITEM Nº	CÓDIGO	DESIGNAÇÃO	DESIGNATION	QUANT.
1	4.0.007.0027	CALDEIRA INOX 0,5LT 1500W S/ TERMOFUSIVEIS	SS BOILER 0,5LT 1500W WITHOUT THERMOFUSES	1
2	4.0.000.0100	RACORD G1/8 TUBO TEFLON ø4	ø4 G1/8 TEFLON TUBE RACORD	2
3	7.0.028.1022	APOIO CALDEIRA INOX 0.5LT	0,5L INOX BOILER SUPPORT	1
4	4.0.000.0152	TAMPAO G1/8	G1/8 PLUG	1
5	4.0.000.0931	SONDA TEMPERATURA G1/8	TEMPERATURE PROBE G1/8	1
6	4.2.000.9061	PARAFUSO CAB. SEXT. M4X6 NIQ. DIN933	M4X6 NIQ. DIN933 HEX HEAD SREW	2
7	4.0.028.0068	ORING 7X3 VITON	ORING 7X3 VITON	1
8	4.0.000.0425	ISOLAMENTO CALDEIRA CAFE 0,5LT	COFFEE BOILER INSULATION 0,5LT	1
9	4.0.000.0120	ORING 8X2 VITON	ORING 8X2 VITON	2
10	5.0.110.0038	SUPORTE TERMOFUSIVEL	THERMOFUSE SUPPORT	1
11	5.0.110.0037	TERMOFUSIVEL 128°C	128°C THERMOFUSE	2
12	4.2.000.9135	ANILHA RECART. M4 ZINC. DIN6798A	ZINC-PLATED TOOTHED WASHER M4 DIN6798A	1
13	4.2.000.9171	PORCA M4 ZINC. DIN934	M4 NUT ZINC. DIN934	1

restoran.eu

MÁQ. CAFÉ COMPASS 2 MB

ESPRESSO COFFEE MACHINE COMPASS 2 MB

67 - 7.0.007.0111 - CABO H07RN-F 5G4-1,8MT CONJ. COMPASS 3

67 - FEEDING CABLE H07RN-F 5G4-1,8MT ASS. COMPASS 3

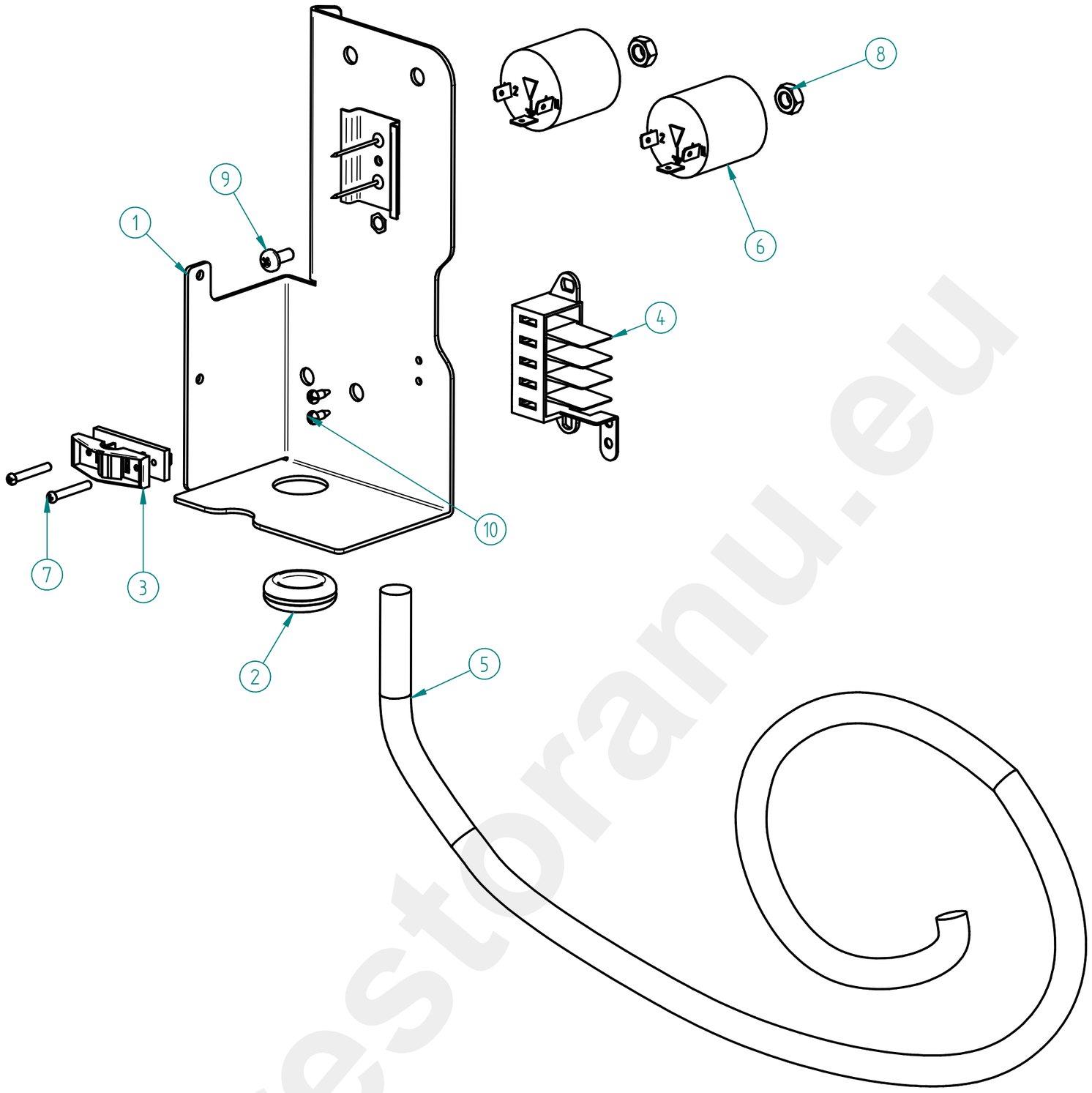

restoranu.eu

ITEM Nº	CÓDIGO	DESIGNAÇÃO	DESIGNATION	QUANT.
1	7.0.007.0028	SUPORTE CERRA CABOS COMPASS	CABLE FASTENER SUPPORT COMPASS	1
2	4.0.000.0372	PASSA FIOS P/ FURO ø25MM	WIRE PROTECTION	1
3	4.0.000.0496	CERRA CABOS PA 268	CABLE FASTENER PA 268	1
4	4.0.028.0015	LIGADOR RAPIDO 5 POLOS	FAST LINKER	1
5	4.0.028.0058	CABO H07RN-F 5G4	H07RN-F 5G4 CABLE	1
6	4.0.000.0997	FILTRO EMC MAQ. CAFE	EMC FILTER COFFEE MACHINE	2
7	4.2.000.9129	PARAFUSO ROSCA PLASTICO KB3,5X25 ZINC.	SCREW KB3,5X25	2
8	4.2.000.9174	PORCA M8 ZINC. DIN934	M8 NUT ZINC. DIN934	2
9	4.2.000.9121	PARAFUSO CAB. PH M5X12 ZINC. DIN7985	M5X12 ZINC. PH HEAD SREW DIN 7985	1
10	4.2.000.9103	PARAFUSO ROSCA CHAPA B3,5X9,5 NIQ. DIN7981	SCREW B3,5X9,5	2

Management System ISO 9001:2015
TÜVRheinland CERTIFIED
www.tuv.com ID 9108624282

www.fiamma.pt

This drawing may be altered without previous notice.
Os elementos deste desenho podem ser alterados sem aviso prévio.

MÁQ. CAFÉ COMPASS 2 MB

ESPRESSO COFFEE MACHINE COMPASS 2 MB

77 - 7.0.007.0107- TORNEIRA AGUA MISTURADA COMPASS

77 - MIX WATER TAP COMPASS

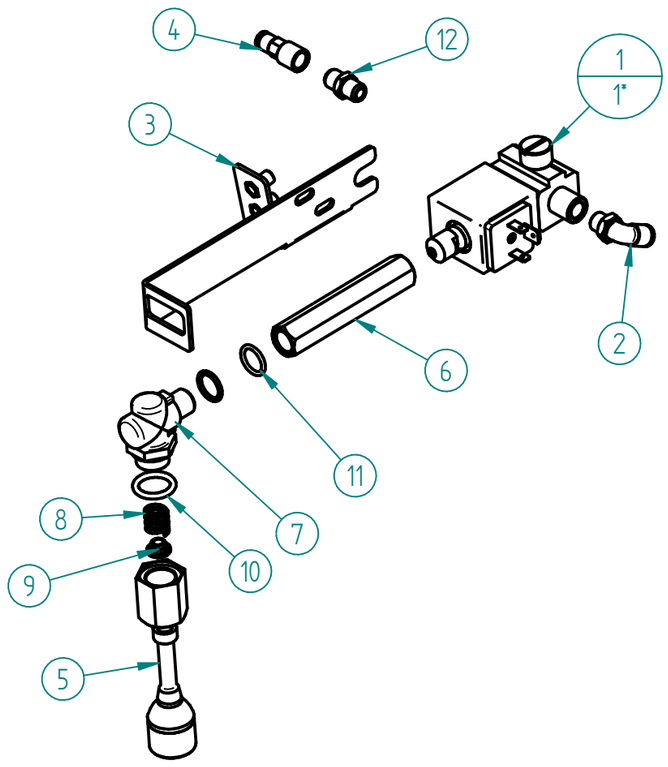

ITEM Nº	CÓDIGO	DESIGNAÇÃO	DESIGNATION	QUANT.
1	4.0.028.0017	ELECTROVALVULA 3 VIAS 230V MISTURADORA	3 WAY 230V SOLENOID MIXER	1
2	4.0.000.0108	RACORD L G1/8 TUBO TEFLON ø6	ø6 G1/8 TEFLON TUBE L RACORD	1
3	7.0.007.0059	SUPORTE TORNEIRA AGUA COMPASS	SUPPORT WATER TAP COMPASS	1
4	4.0.000.0101	RACORD G1/8F TUBO TEFLON ø4	ø4 G1/8F TEFLON TUBE RACORD	1
5	5.0.016.0330	TUBO TORNEIRA AGUA ATLANTIC (CONJ.)	WATER TAP TUBE ASS.	1
6	4.0.028.0018	RACORD SAIDA ELECT. 3 VIAS 230V MIST.	3 WAY 230V SOLENOID EXIT RACORD	1
7	4.0.028.0030	RACORD L G1/4-G3/8 - TUBO TORN. AGUA	KNEE G1/4-G3/8 - WATER TAP TUBE	1
8	5.0.025.7060	MOLA TUBO AGUA/VAPOR TORN. EVOL.	SPRING TAP	1
9	5.0.025.6508	GUIA MOLA TUBO AGUA/VAPOR TORN. EVOL.	GUIDE BUSH	1
10	4.0.000.0012	ANILHA 16x22MM (G3/8) COBRE	GASKET G3/8 CU	1
11	4.0.000.0013	ANILHA 13x17MM (G1/4) COBRE	GASKET G1/4 CU	2
12	5.0.000.0725	RACORD G1/8-G1/8 NIQ.	RACORD G1/8-G1/8 NIQ.	1

MODELO 208-240V/60HZ / *MODEL 208-240V/60HZ*

77 - 7.0.007.0108 - TORNEIRA AGUA MISTUR. 60HZ COMPASS

77 - MIXER WATER TAP 60HZ COMPASS

ITEM Nº	CÓDIGO	DESIGNAÇÃO	DESIGNATION	QUANT.
1*	4.0.028.0020	ELECTROVALVULA 3 VIAS 220-240V/60Hz MISTURADORA	3 WAY 220-240V/60Hz MIXER SOLENOID VALVE	1

5 - 5.0.016.0330 - TUBO TORNEIRA AGUA ATLANTIC (CONJ.)

5 - WATER TAP TUBE ASS.

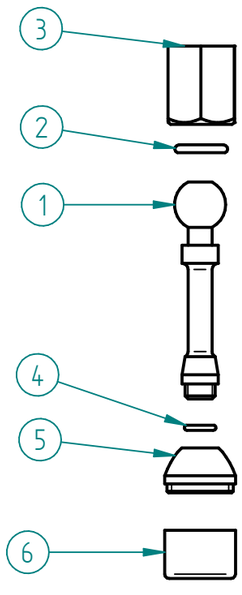

ITEM Nº	CODIGO	DESIGNAÇÃO	DESIGNATION	QUANT.
1	5.0.016.0331	TUBO TORNEIRA AGUA CROM. ATLANTIC	WATER TAP TUBE	1
2	5.0.025.0205	ORING 12,1x2,7 PORCA TUBO TORN.	ORING 12,1x2,7	1
3	5.0.016.0321	PORCA TUBO TORN. ATLANTIC	TAP TUBE NUT	1
4	5.0.000.0565	ORING 7,2X1,9 VEIO TORN. BR-03	TAP SHAFT ORING	1
5	5.0.000.0640	PONTEIRA TUBO ÁGUA	POINT OF THE WATER TUBE	1
6	5.0.000.0148	ESPALHADOR PONTEIRA ÁGUA	SPRAYER OF THE WATER POINT	1

restoranu.eu

MÁQ. CAFÉ COMPASS 2 MB

ESPRESSO COFFEE MACHINE COMPASS 2 MB

78 - PM-PAINEL FRONTAL COMPASS 2 MB TC

78 - FRONT PANEL COMPASS 2 MB TC

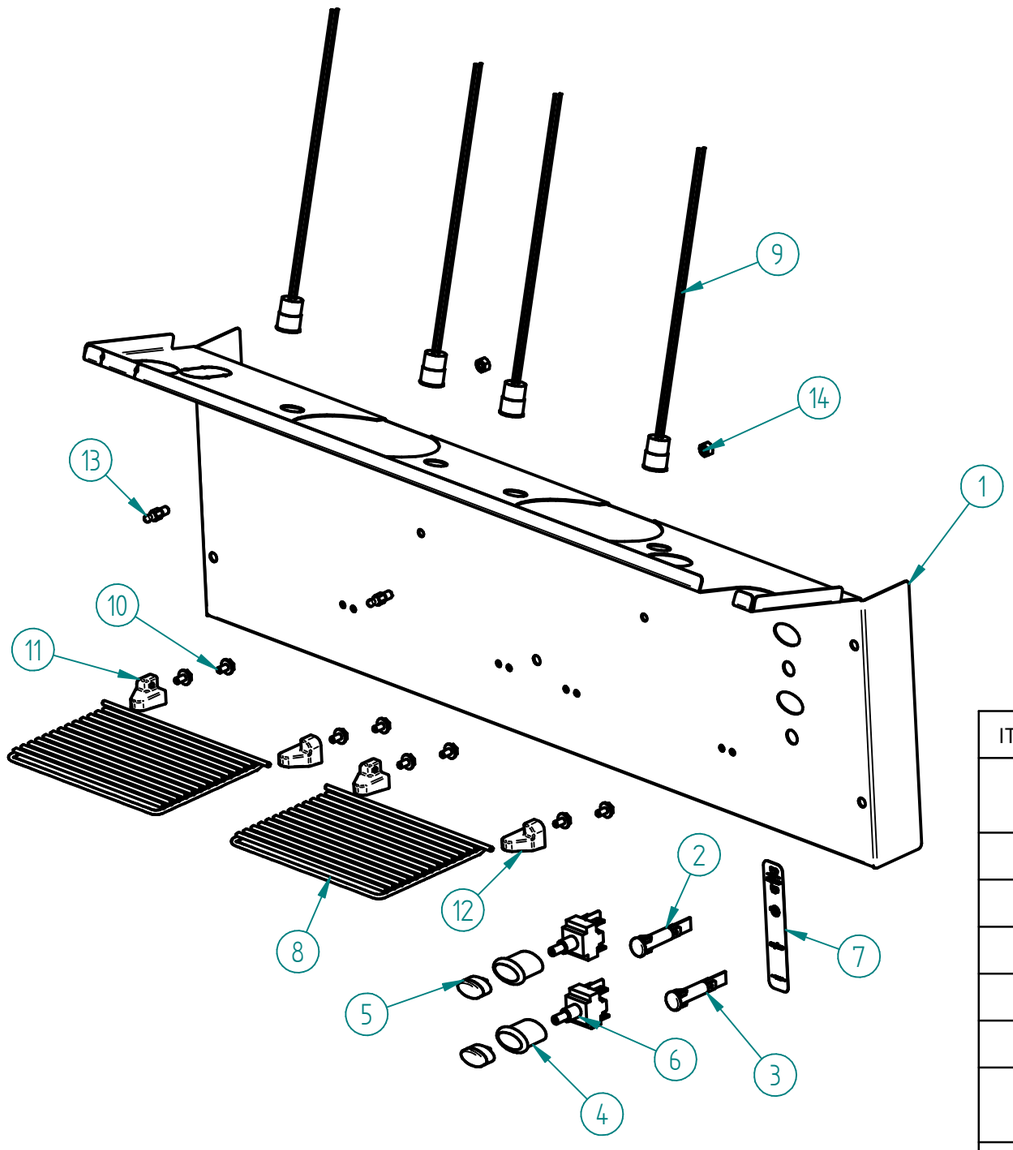

ITEM Nº	CÓDIGO	DESIGNAÇÃO	DESIGNATION	QUANT.
1	7.0.007.0573	PAINEL FRONTAL GRELHA ARAME COMPASS 2 MB TC	FRONT PANEL COMPASS 2 MB TC	1
2	4.0.025.0130	SINALIZADOR VERDE Ø10MM TERM. MACHO	GREEN LED Ø10MM	1
3	4.0.025.0135	SINALIZADOR LARANJA Ø10MM TERM. MACHO	ORANGE LED Ø10MM	1
4	4.0.000.0503	CAIXA ELIPSE D16	BOX D16 ELIPSE	2
5	4.0.000.0507	TASTO ELIPSE D16	SWITCH KEY D16	2
6	4.0.000.0513	INTERRUPTOR BIPOLAR E0070	TWO POLES SWITCH E0070	2
7	4.0.007.0064	AUTOCOLANTE INTERRUPTOR GERAL COMPASS	MAIN SWITCH SELF-STICKING PLATE COMPASS	1
8	4.0.016.7015-A	GRELHA CHAVENAS ARAME CARAVEL/COMPASS/QUADRANT	WIRE COFFEE TRAY GRID	2
9	4.0.007.0041-A	LED BRANCO ROSCADO Ø13MM 12V C/ CABO	FITTING WHITE LED Ø13MM 12V W/ CABLE	4
10	4.2.000.9126	PARAFUSO ROSCA PLASTICO K40X8 ZINC.	SCREW K40X8	8
11	4.0.016.7018-A	SUPORTE ESQUERDO GRELHA CHAVENAS ARAME	WIRE CUP LEFT SUPPORT	2
12	4.0.016.7017-A	SUPORTE DIREITO GRELHA CHAVENAS ARAME	WIRE CUP RIGHT SUPPORT	2
13	4.0.016.7020	FIXADOR GRELHA CHAVENAS ARAME	FIXER PIN	2
14	4.2.000.9172	PORCA M5 ZINC. DIN934	M5 NUT ZINC. DIN934	2

restoranu.eu

MÁQUINAS GRUPOS BAIXOS / *LOW CUPS MACHINES*

78 - PM-PAINEL FRONTAL COMPASS 2 MB

78 - FRONT PANEL COMPASS 2 MB

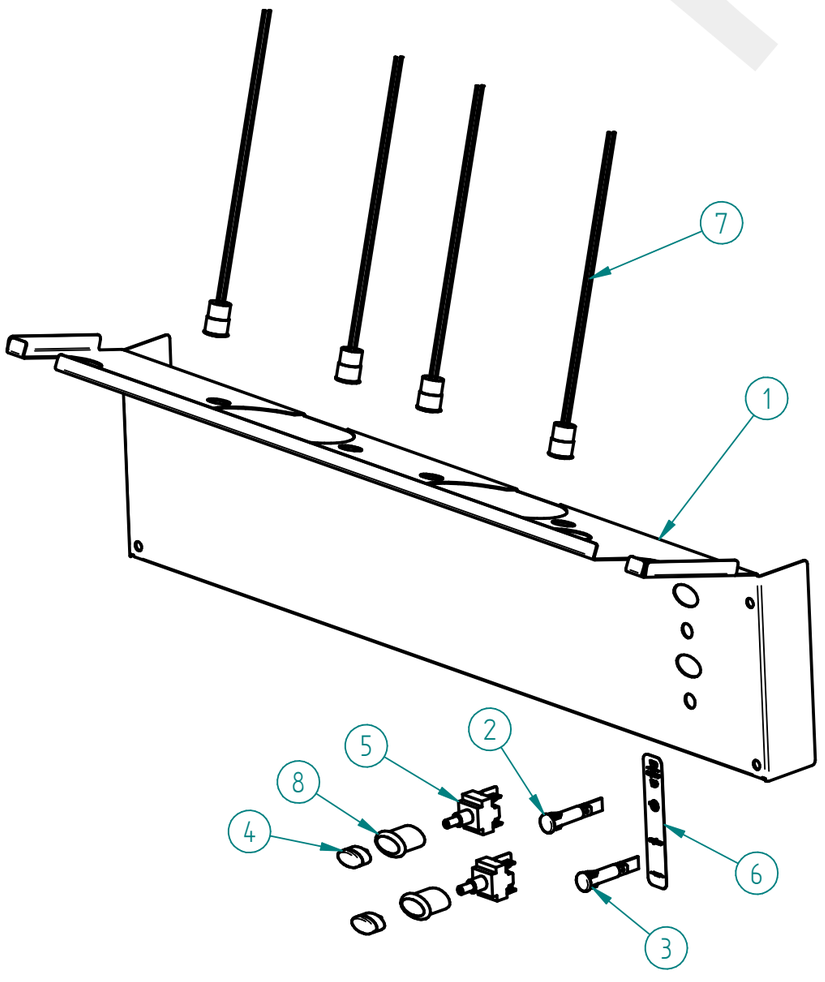

ITEM Nº	CÓDIGO	DESIGNAÇÃO	DESIGNATION	QUANT.
1	7.0.007.0471	PAINEL FRONTAL COMPASS 2 MB	FRONT PANEL COMPASS 2 MB	1
2	4.0.025.0130	SINALIZADOR VERDE Ø10MM TERM. MACHO	GREEN LED Ø10MM	1
3	4.0.025.0135	SINALIZADOR LARANJA Ø10MM TERM. MACHO	ORANGE LED Ø10MM	1
4	4.0.000.0507	TASTO ELIPSE D16	SWITCH KEY D16	2
5	4.0.000.0513	INTERRUPTOR BIPOLAR E0070	TWO POLES SWITCH E0070	2
6	4.0.007.0064	AUTOCOLANTE INTERRUPTOR GERAL COMPASS	MAIN SWITCH SELF-STICKING PLATE COMPASS	1
7	4.0.007.0041-A	LED BRANCO ROSCADO Ø13MM 12V C/ CABO	FITTING WHITE LED Ø13MM 12V W/ CABLE	4
8	4.0.000.0503	CAIXA ELIPSE D16	BOX D16 ELIPSE	2

Management System ISO 9001:2015
TÜVRheinland CERTIFIED
www.tuv.com ID 9108624282

www.fiamma.pt

This drawing may be altered without previous notice.
Os elementos deste desenho podem ser alterados sem aviso prévio.

MÁQ. CAFÉ COMPASS 2 MB

ESPRESSO COFFEE MACHINE COMPASS 2 MB

80 - PM-PAINEL COMANDO SUPERIOR CONJ. COMPASS 2 MB

80 - UPPER CONTROL PANEL ASS. COMPASS 2 MB

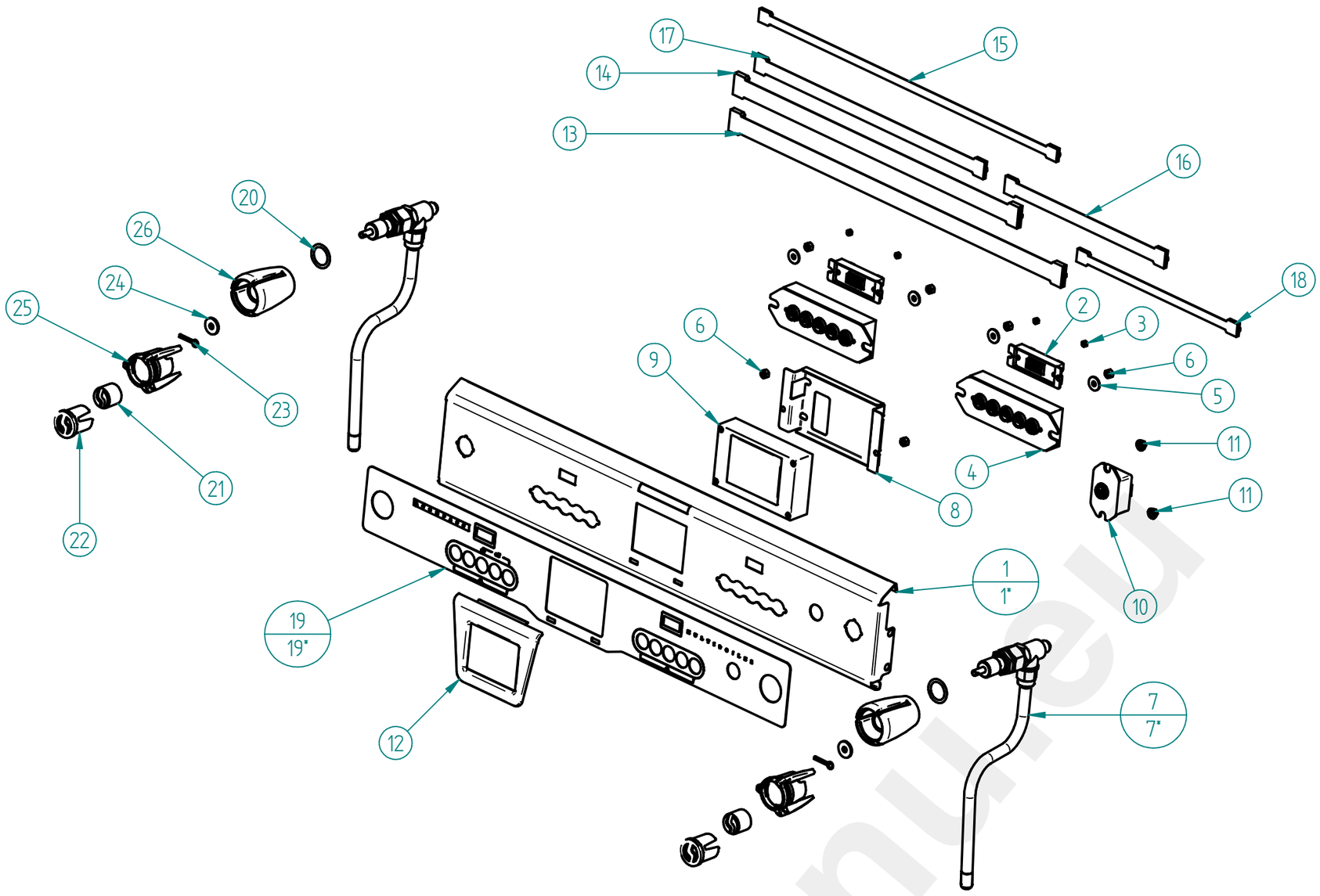

ITEM Nº	CÓDIGO	DESIGNAÇÃO	DESIGNATION	QUANT.
1	7.0.007.0580	PAINEL COMANDO SUP. COMPASS 2 MB NV2 WHITE	UPPER CONTROL PANEL COMPASS 2 MB NV2 WHITE	1
2	7.0.007.0129	DISPLAY 3 DIGITOS BRANCO CONJ.	DISPLAY 3 DIGIT ASSEMB.	2
3	4.2.000.9170	PORCA M3 ZINC. DIN934	M3 NUT ZINC. DIN934	4
4	7.0.007.0134	TECLADO 5T PLUS Ø16 FIAMMA CONJ.	PUSH-BUTTON PANEL 5 PLUS Ø16 ASSEMB. FIAMMA	2
5	4.2.000.9164	ANILHA PLANA M5X15 ZINC. DIN9021	ZINC-PLATED M5X15 FLAT RING DIN9021	4
6	4.2.000.9172	PORCA M5 ZINC. DIN934	M5 NUT ZINC. DIN934	6
7	7.0.007.0160	TORNEIRA MEIA VOLTA ECC-23 RST (CONJ. VAPOR) COOL TOUCH	COOL TOUCH TAP ECC-07 G1/4-G1/8F (STEAM ASS.)	2
8	7.0.007.0556	FIXADOR DISPLAY XPVIEWER 35 TOUCH	DISPLAY FASTENER XPVIEWER 35 TOUCH	1
9	4.0.000.0890	DISPLAY LCD GRAFICO TOUCH XPVIEWER35 RST	TOUCH GRAFIC LCD DISPLAY XPVIEWER35 RST	1
10	7.0.007.0131	TECLA AGUA DOSEADA CONJ.	PUSH-BUTTON PANEL DOSED WATER ASSEMB.	1
11	4.2.000.9180	PORCA M5 ZINC. C/ RECART. DIN6923	M5 NUT ZINC. DIN6923	2
12	4.0.007.0120	PROTECCAO DISPLAY TOUCH COMPASS MB	DISPLAY TOUCH PROTECTION COMPASS MB	1
13	4.0.000.0972	CABO UNIDADE ELECTR. TECLADO 16 PIN 850MM	CABLE FOR ELECTR. UNIT KEYBOARD 16 PIN 850MM	1
14	4.0.000.0971	CABO UNIDADE ELECTR. TECLADO 16 PIN 600MM	CABLE FOR ELECTR. UNIT KEYBOARD 16 PIN 600MM	1
15	4.0.007.0046	CABO UNIDADE ELECTR. DISPLAY TOUCH 4 PIN 800MM	DISPLAY TOUCH/CONTROL BOX CABLE 4 PIN 800MM	1
16	4.0.007.0048	CABO DISPLAY 3 DIGIT DISPLAY 3 DIGIT 6 PIN 400MM	DISPLAY CABLE 3 DIGIT 6 PIN 400MM	1
17	4.0.007.0047	CABO UNIDADE ELECTR. DISPLAY 3 DIGIT 6 PIN 650MM	DISPLAY/CONTROL BOX CABLE 3 DIGIT 6 PIN 650MM	1
18	4.0.007.0045	CABO TECLADO 5T TECLA AGUA DOSEADA 6/4 PIN 200MM	KEYBOARD 5T WATER BUTTON CABLE 6/4 PIN 200MM	1
19	4.0.007.0062-A	PAINEL PERS. COMPASS 2MB WHITE	CUSTOM. PANEL COMPASS 2 MB BLACK	1
20	4.0.000.0011	ANILHA 20X26MM (G1/2) COBRE	GASKET G1/2 CU	2
21	4.0.007.0135	SIMBOLO FIAMMA BRANCO MAN. TORN. RST	WHITE SYMBOL FIAMMA TAP KNOB RST	2
22	4.0.007.0131	TAMPAO MAN. TORN. RST	FILTER HOLDER HANDLE TAP	2
23	4.0.016.0025	GOLPILHA INOX MAN. TORN. ECC-07	TAP ECC-07 LOCKER	2
24	4.0.016.0024	ANILHA LATAO 2MM MAN. TORN. ECC-07	MS WASHER 2MM	2
25	4.0.007.0127	ANEL CROMADO MAN. TORN. RST	CHROME RING TAP KNOB RST	2
26	4.0.007.0126	CORPO MANIPULO TORN. MEIA VOLTA ECC-23 RST	BODY TAP KNOB RST	2

ITEM Nº	CÓDIGO	DESIGNAÇÃO	DESIGNATION	MOD./MODEL	QUANT.
1*	7.0.007.0581	PAINEL COMANDO SUP. COMPASS 2 MB NV2 BLACK	UPPER CONT. PANEL COMPASS 2 MB NV2 BLACK	MAQ. CAFE COMPASS 2 MB BLACK	1
7*	7.0.007.0161	TORNEIRA MEIA VOLTA ECC-23 RST (CONJ. VAPOR) COOL TOUCH LC	COOL TOUCH LEVER TAP G1/4-G3/8 RST (STEAM ASS.) LC	MAQ. CAFE COMPASS 2 MB WHITE / MAQ. CAFE COMPASS 2 MB BLACK	2
19*	4.0.007.0072-A	PAINEL PERSONALIZADO COMPASS 2 MB BLACK	CUSTOM. PANEL COMPASS 2MB BLACK	MAQ. CAFE COMPASS 2 MB BLACK	1

Management System ISO 9001:2015 TÜVRheinland CERTIFIED www.tuv.com ID 9108624282

www.fiamma.pt

This drawing may be altered without previous notice.
Os elementos deste desenho podem ser alterados sem aviso prévio.

MB „Restoranų įranga“ · Vito Gerulaičio 1-59, LT-08200 Vilnius · +370 614 89888 · info@restoranu.eu · www.restoranu.eu

MÁQ. CAFÉ COMPASS 2 MB

ESPRESSO COFFEE MACHINE COMPASS 2 MB

MÁQUINAS GRUPOS ALTOS / *TALL CUPS MACHINES*

7- 7.0.007.0160 - TORNEIRA MEIA VOLTA ECC-23 RST (CONJ. VAPOR) COOL TOUCH

7 - STEAM TAP ECC-23 ASSEMB. COOL TOUCH

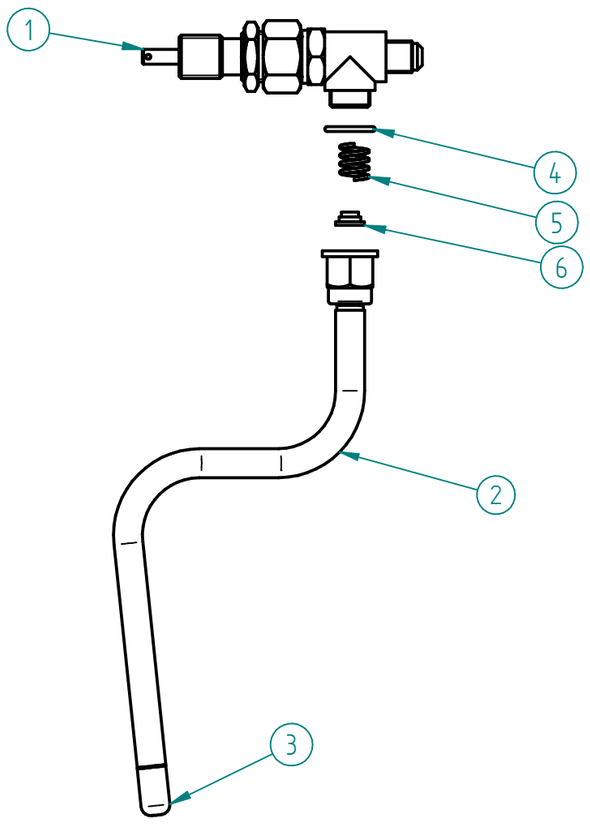

ITEM Nº	CÓDIGO	DESIGNAÇÃO	DESIGNATION	QUANT.
1	4.0.007.0124	TORNEIRA MEIA VOLTA ECC-23 RST	ECC-23 TAP RST	1
2	5.0.028.0340	TUBO TORNEIRA VAPOR COOL TOUCH (CONJ.)	COOL TOUCH STEAM TAP TUBE	1
3	5.0.028.0345	ESPALHADOR VAPOR TORN. COOL TOUCH - 3 FUROS	SPRAYER OF THE COOL TOUCH STEAM TAP - 3 HOLES	1
4	5.0.028.0342	ORING 16X2 TUBO VAPOR COOL TOUCH	ORING 16X2 COOL TOUCH STEAM TUBE	1
5	5.0.028.0344	MOLA TUBO VAPOR COOL TOUCH	COOL TOUCH STEAM TUBE SPRING	1
6	5.0.028.0343	GUIA MOLA TUBO VAPOR COOL TOUCH	COOL TOUCH STEAM TUBE SPRING GUIDE	1

7 - 7.0.007.0150 -TORNEIRA ALAVANCA G1/4-G3/8 RST (CONJ. VAPOR) COOL TOUCH

7 - STEAM TAP COOL TOUCH G1/4-G3/8 RST

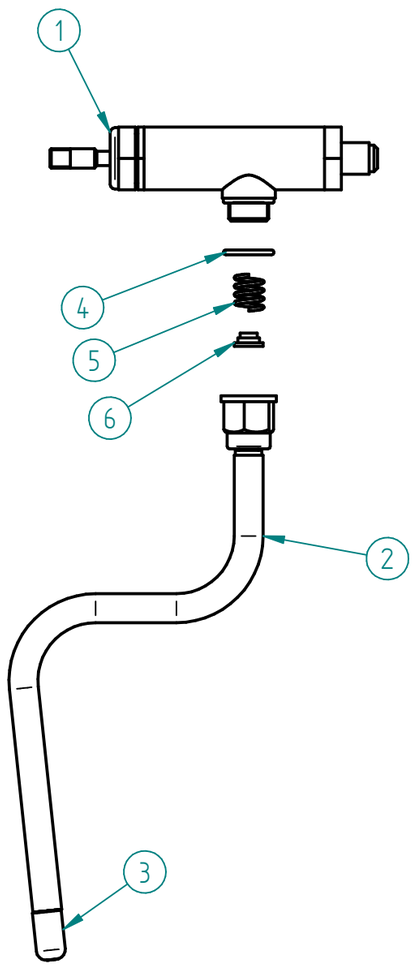

ITEM Nº	CÓDIGO	DESIGNAÇÃO	DESIGNATION	QUANT.
1	5.0.007.0010	TORNEIRA ALAVANCA G1/4-G3/8 RST	LEVER TAP G1/4-G3/8 RST	1
2	5.0.028.0340	TUBO TORNEIRA VAPOR COOL TOUCH (CONJ.)	COOL TOUCH STEAM TAP TUBE	1
3	5.0.028.0345	ESPALHADOR VAPOR TORN. COOL TOUCH - 3 FUROS	SPRAYER OF THE COOL TOUCH STEAM TAP - 3 HOLES	1
4	5.0.028.0342	ORING 16X2 TUBO VAPOR COOL TOUCH	ORING 16X2 COOL TOUCH STEAM TUBE	1
5	5.0.028.0344	MOLA TUBO VAPOR COOL TOUCH	COOL TOUCH STEAM TUBE SPRING	1
6	5.0.028.0343	GUIA MOLA TUBO VAPOR COOL TOUCH	COOL TOUCH STEAM TUBE SPRING GUIDE	1

PEÇAS P/ ADAPTADOR MANIPULO / TAP KNOB ADAPTER PARTS

CÓDIGO	DESIGNAÇÃO	DESIGNATION	QUANT.
5.0.007.0011-A	RACORD ADAPT. TR18X4A2P-M8F TORN. ALAVANCA RST	RACORD ADAPT. LEVER TAP RST	1
5.0.007.0012	PARAFUSO SEM CAB. UMBR. M8X10 ZINC. DIN916	ZINC-PLATED SOCKET SET SCREW M8X10 DIN916	1
4.0.007.0126	CORPO MANIPULO TORN. RST	BODY TAP KNOB RST	1



restoranu.eu

MÁQ. CAFÉ COMPASS 2 MB

ESPRESSO COFFEE MACHINE COMPASS 2 MB

MÁQUINAS GRUPOS BAIXOS / *LOW CUPS MACHINES*

7 - 7.0.007.0161 - TORNEIRA MEIA VOLTA ECC-23 RST (CONJ. VAPOR) COOL TOUCH LC

7 - STEAM TAP COOL TOUCH LC ASS. ECC-23

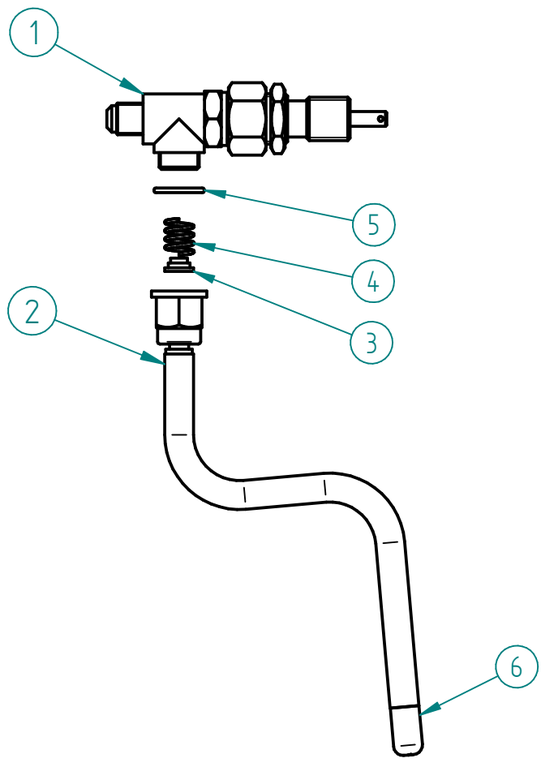

ITEM Nº	CÓDIGO	DESIGNAÇÃO	DESIGNATION	QUANT.
1	4.0.007.0124	TORNEIRA MEIA VOLTA ECC-23 RST	ECC-23 TAP RST	1
2	5.0.007.0340-A	TUBO TORNEIRA VAPOR COOL TOUCH (CONJ.) LOW CUPS	COOL TOUCH STEAM TAP TUBE	1
3	5.0.028.0343	GUIA MOLA TUBO VAPOR COOL TOUCH	COOL TOUCH STEAM TUBE SPRING GUIDE	1
4	5.0.028.0344	MOLA TUBO VAPOR COOL TOUCH	COOL TOUCH STEAM TUBE SPRING	1
5	5.0.028.0342	ORING 16X2 TUBO VAPOR COOL TOUCH	ORING 16X2 COOL TOUCH STEAM TUBE	1
6	5.0.028.0345	ESPALHADOR VAPOR TORN. COOL TOUCH - 3 FUROS	SPRAYER OF THE COOL TOUCH STEAM TAP - 3 HOLES	1

7 - 7.0.007.0151-A -TORNEIRA ALAVANCA G1/4-G3/8 RST (CONJ. VAPOR) COOL TOUCH LC

7 - STEAM TAP COOL TOUCH LC G1/4-G3/8 RST

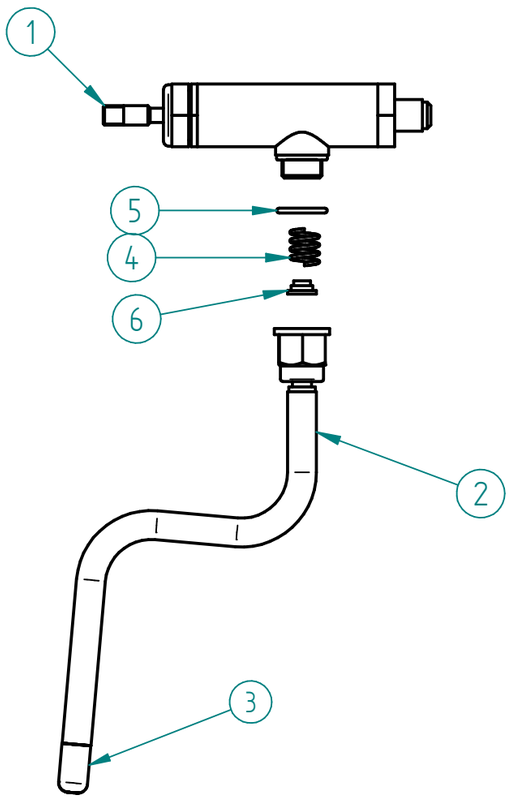

ITEM Nº	CÓDIGO	DESIGNAÇÃO	DESIGNATION	QUANT.
1	5.0.007.0010	TORNEIRA ALAVANCA G1/4-G3/8 RST	LEVER TAP G1/4-G3/8 RST	1
2	5.0.007.0340-A	TUBO TORNEIRA VAPOR COOL TOUCH (CONJ.) LOW CUPS	COOL TOUCH STEAM TAP TUBE	1
3	5.0.028.0345	ESPALHADOR VAPOR TORN. COOL TOUCH - 3 FUROS	SPRAYER OF THE COOL TOUCH STEAM TAP - 3 HOLES	1
4	5.0.028.0344	MOLA TUBO VAPOR COOL TOUCH	COOL TOUCH STEAM TUBE SPRING	1
5	5.0.028.0342	ORING 16X2 TUBO VAPOR COOL TOUCH	ORING 16X2 COOL TOUCH STEAM TUBE	1
6	5.0.028.0343	GUIA MOLA TUBO VAPOR COOL TOUCH	COOL TOUCH STEAM TUBE SPRING GUIDE	1



PEÇAS P/ ADAPTADOR MANIPULO / TAP KNOB ADAPTER PARTS

CÓDIGO	DESIGNAÇÃO	DESIGNATION	QUANT.
5.0.007.0011-A	RACORD ADAPT. TR18X4A2P-M8F TORN. ALAVANCA RST	RACORD ADAPT. LEVER TAP RST	1
5.0.007.0012	PARAFUSO SEM CAB. UMBR. M8X10 ZINC. DIN916	ZINC-PLATED SOCKET SET SCREW M8X10 DIN916	1
4.0.007.0126	CORPO MANIPULO TORN. RST	BODY TAP KNOB RST	1

restoranu.eu

MÁQ. CAFÉ COMPASS 2 MB

ESPRESSO COFFEE MACHINE COMPASS 2 MB

4.0.007.0124 - TORNEIRA MEIA VOLTA ECC-23 RST

TAP ECC-23

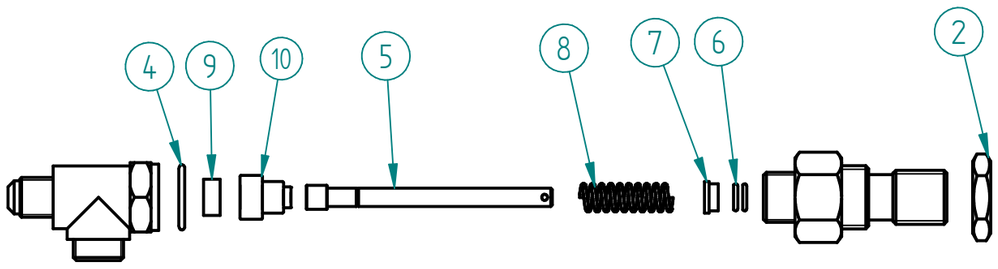

ITEM Nº	CODIGO	DESIGNAÇÃO	DESIGNATION	QUANT.
2	4.0.155.0015	PORCA G1/2 LATAO	BRASS NUT G1/2	1
4	5.0.016.0303	JUNTA COBRE 22X17X2MM TORN. ECC-07	TAP GASKET	1
5	5.0.007.0338	VEIO TORNEIRA MEIA VOLTA ECC-23 RST	TAP ECC-23 SHAFT	1
6	5.0.016.0306	ORING VEIO TORN. ECC-07	TAP SHAFT ORING	2
7	5.0.016.0305	CASQUILHO VEIO TORN. ECC-07	METAL SLEEVE	1
8	5.0.016.0302	MOLA VEIO TORN. ECC-07	TAP SHAFT SPRING	1
9	5.0.016.0301	VEDANTE BORRACHA TORN. ECC-07	TAP ECC-07 GASKET	1
10	5.0.007.0339	EXTENSÃO VEIO TORNEIRA MEIA VOLTA ECC-23 RST	TAP ECC-23 SHAFT EXTENSION	1

5.0.007.0010 - TORNEIRA ALAVANCA G1/4-G3/8 RST

LEVER TAP G1/4-G3/8 RST

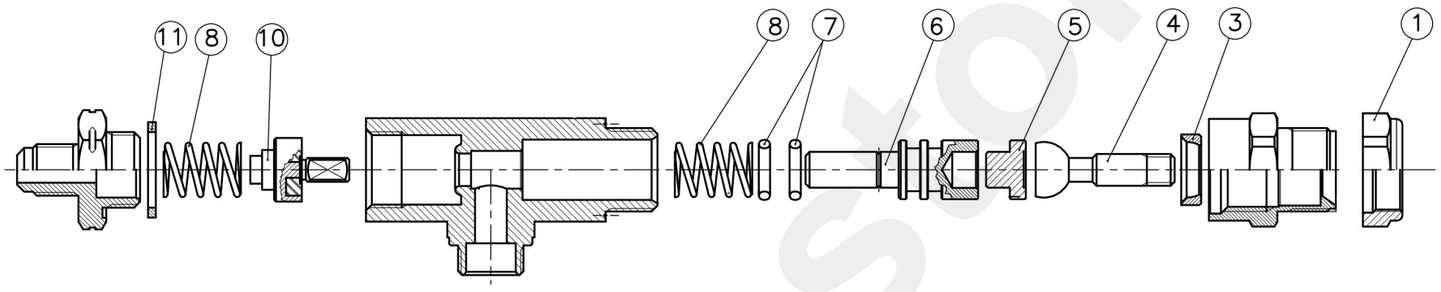

ITEM	CÓDIGO	DESIGNAÇÃO	DESIGNATION	QUANT.
1	5.0.007.0311	PORCA M21X1 CROM. TORN. ALAVANCA	NUT M21X1 CROM. LEVER TAP	1
3	5.0.007.0309	INSERTO AÇO NITRO. TORN ALAVANCA	STEEL INSERT LEVER TAP	1
4	5.0.007.0308	VEIO FRONTAL AÇO NITRO. C/ ESFERA TORN. ALAVANCA	FRONT SHAFT LEVER TAP	1
5	5.0.007.0307	CASQUILHO AÇO NITRO. TORN. ALAVANCA	METAL SLEEVE LEVER TAP	1
6	5.0.007.0305	VEIO POSTERIOR PORTA ORINGS TORN. ALAVANCA	REAR SHAFT LEVER TAP	1
7	5.0.007.0306	ORING VEIO POST. TORN. ALAVANCA	REAR SHAFT ORING LEVER TAP	2
8	5.0.007.0304	MOLA VEIO TORN. ALAVANCA	SHAFT SPRING LEVER TAP	2
10	5.0.007.0301	VALVULA ANTI-RETORNO TORN. ALAVANCA	ANTI-BACKFLOW VALVE LEVER TAP	1
11	5.0.007.0302	JUNTA TEFLON 24X19X2 TORN. ALAVANCA	TEFLON GASKET 24X19X2MM LEVER TAP	1

restoranu.eu

MÁQ. CAFÉ COMPASS 2 MB

ESPRESSO COFFEE MACHINE COMPASS 2 MB

OPCIONAL / *OPTIONAL*

TORNEIRA VAPOR C/ SONDA COMPASS

TURBO-STEAM COMPASS

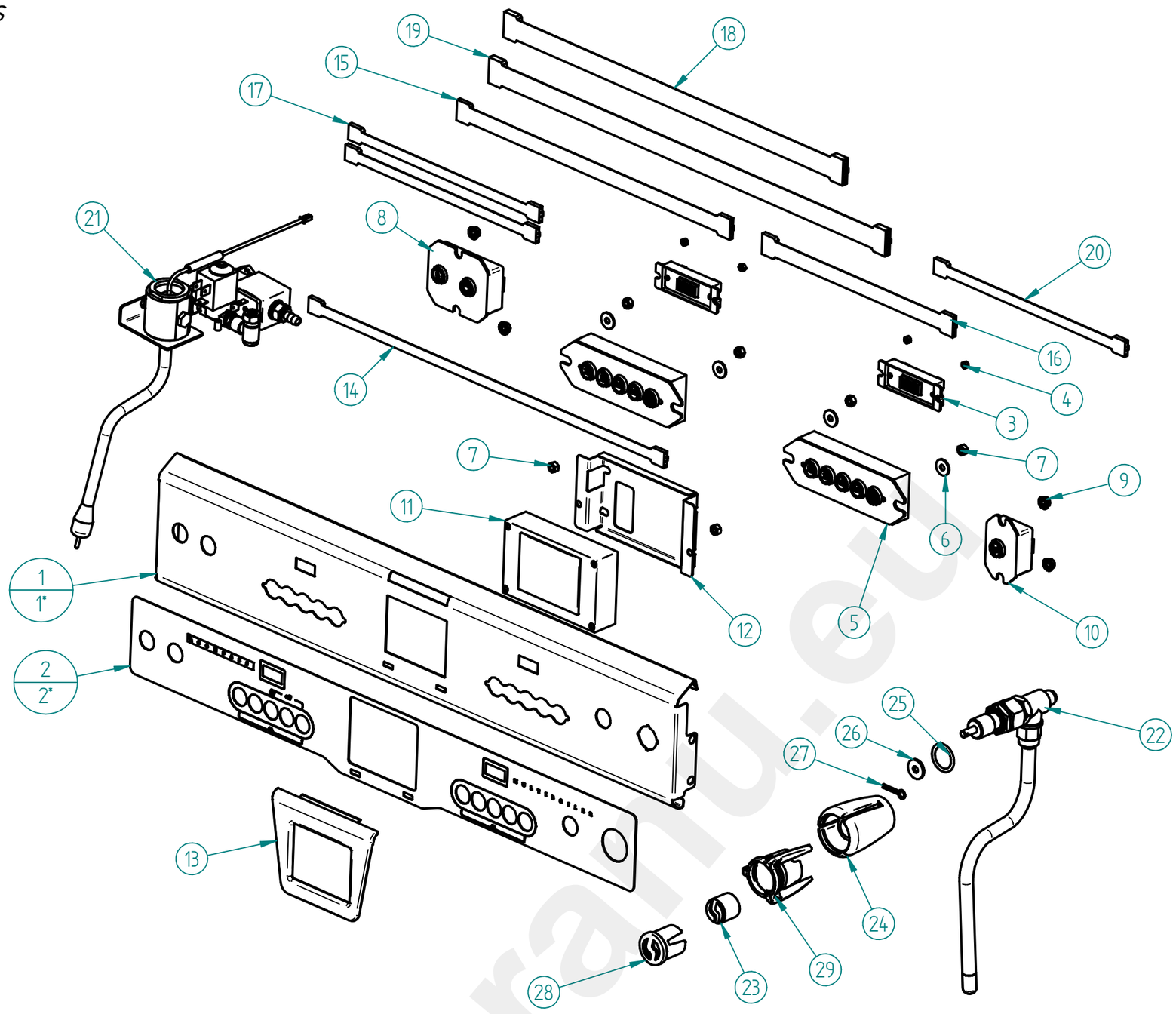

ITEM Nº	CÓDIGO	DESIGNAÇÃO	DESIGNATION	QUANT.
1	7.0.007.0590	PAINEL COMANDO SUP. COMPASS 2 MB NV2 (TURBO STEAM) WHITE	UPPER CONT. PANEL COMPASS 2 MB NV2 (TURBO STEAM) WHITE	1
2	4.0.007.0063-A	PAINEL PERS. COMPASS 2MB WHITE (TURBO STEAM)	CUSTOM. PANEL COMPASS 2MB BLACK (TURBO STEAM)	1
3	7.0.007.0130	DISPLAY 3 DIGITOS CONJ.	DISPLAY 3 DIGIT ASSEMB.	2
4	4.2.000.9170	PORCA M3 ZINC. DIN934	M3 NUT ZINC. DIN934	4
5	7.0.007.0134	TECLADO 5T PLUS Ø16 FIAMMA CONJ.	PUSH-BUTTON PANEL 5 PLUS Ø16 ASSEMB. FIAMMA	2
6	4.2.000.9164	ANILHA PLANA M5X15 ZINC. DIN9021	ZINC-PLATED M5X15 FLAT RING DIN9021	4
7	4.2.000.9172	PORCA M5 ZINC. DIN934	M5 NUT ZINC. DIN934	6
8	7.0.007.0132	TECLADO TURBO STEAM CONJ.	PUSH-BUTTON PANEL TURBO STEAM ASSEMB.	1
9	4.2.000.9180	PORCA M5 ZINC. C/ RECART. DIN6923	M5 NUT ZINC. DIN6923	4
10	7.0.007.0131	TECLA AGUA DOSEADA CONJ.	PUSH-BUTTON PANEL DOSED WATER ASSEMB.	1
11	4.0.000.0890	DISPLAY LCD GRAFICO TOUCH XPVIEWER35 RST	TOUCH GRAFIC LCD DISPLAY XPVIEWER35 RST	1
12	7.0.007.0556	FIXADOR DISPLAY XPVIEWER 35 TOUCH	DISPLAY FASTENER XPVIEWER 35 TOUCH	1
13	4.0.007.0120	PROTECCAO DISPLAY TOUCH COMPASS MB	DISPLAY TOUCH PROTECTION COMPASS MB	1
14	4.0.007.0046	CABO UNIDADE ELECTR. DISPLAY TOUCH 4 PIN 800MM	DISPLAY TOUCH/CONTROL BOX CABLE 4 PIN 800MM	1
15	4.0.007.0047	CABO UNIDADE ELECTR. DISPLAY 3 DIGIT 6 PIN 650MM	DISPLAY/CONTROL BOX CABLE 3 DIGIT 6 PIN 650MM	1
16	4.0.007.0048	CABO DISPLAY 3 DIGIT DISPLAY 3 DIGIT 6 PIN 400MM	DISPLAY CABLE 3 DIGIT 6 PIN 400MM	1
17	4.0.007.0049	CABO UNIDADE ELECTR. TECLA VAPOR 4 PIN 400MM	CONTROL BOX/STEAM SUTTON CABLE 4 PIN 400MM	2
18	4.0.000.0971	CABO UNIDADE ELECTR. TECLADO 16 PIN 600MM	CABLE FOR ELECTR. UNIT KEYBOARD 16 PIN 600MM	1
19	4.0.000.0972	CABO UNIDADE ELECTR. TECLADO 16 PIN 850MM	CABLE FOR ELECTR. UNIT KEYBOARD 16 PIN 850MM	1
20	4.0.007.0045	CABO TECLADO 5T TECLA AGUA DOSEADA 6/4 PIN 200MM	KEYBOARD 5T WATER BUTTON CABLE 6/4 PIN 200MM	1
21	7.0.007.0123	TORNEIRA VAPOR C/ SONDA COMPASS	STEAM TAP W/ PROBE COMPASS	1
22	7.0.007.0160	TORNEIRA MEIA VOLTA ECC-23 RST (CONJ. VAPOR) COOL TOUCH	COOL TOUCH TAP ECC-07 G1/4-G1/8F (STEAM ASS.)	1
23	4.0.007.0135	SIMBOLO FIAMMA BRANCO MAN. TORN. RST	WHITE SYMBOL FIAMMA TAP KNOB RST	1
24	4.0.007.0126	CORPO MANIPULO TORN. MEIA VOLTA ECC-23 RST	BODY TAP KNOB RST	1
25	4.0.000.0011	ANILHA 20X26MM (G1/2) COBRE	GASKET G1/2 CU	1
26	4.0.016.0024	ANILHA LATAO 2MM MAN. TORN. ECC-07	MS WASHER 2MM	1
27	4.0.016.0025	GOLPILHA INOX MAN. TORN. ECC-07	TAP ECC-07 LOCKER	1
28	4.0.007.0131	TAMPAO MAN. TORN. RST	FILTER HOLDER HANDLE TAP	1
29	4.0.007.0127	ANEL CROMADO MAN. TORN. RST	CHROME RING TAP KNOB RST	1

Management System ISO 9001:2015 TÜVRheinland CERTIFIED www.tuv.com ID 9108624282

www.fiamma.pt

This drawing may be altered without previous notice.
Os elementos deste desenho podem ser alterados sem aviso prévio.

MÁQ. CAFÉ COMPASS 2 MB

ESPRESSO COFFEE MACHINE COMPASS 2 MB

ITEM Nº	CÓDIGO	DESIGNAÇÃO	DESIGNATION	MOD./MODEL	QUANT.
1*	7.0.007.0591	PAINEL COMANDO SUP. COMPASS 2 MB NV2 (TURBO STEAM) BLACK	UPPER CONT. PANEL COMPASS 2 MB NV2 (TURBO STEAM) BLACK	MAQ. CAFE COMPASS 2 MB BLACK	1
2*	4.0.007.0073-A	PAINEL PERSONALIZADO COMPASS 2 MB BLACK (TURBO STEAM)	CUSTOM. PANEL COMPASS 2MB BLACK (TURBO STEAM)	MAQ. CAFE COMPASS 2 MB BLACK	1

7.0.007.0123 - TORNEIRA VAPOR C/ SONDA COMPASS

TURBO-STEAM COMPASS

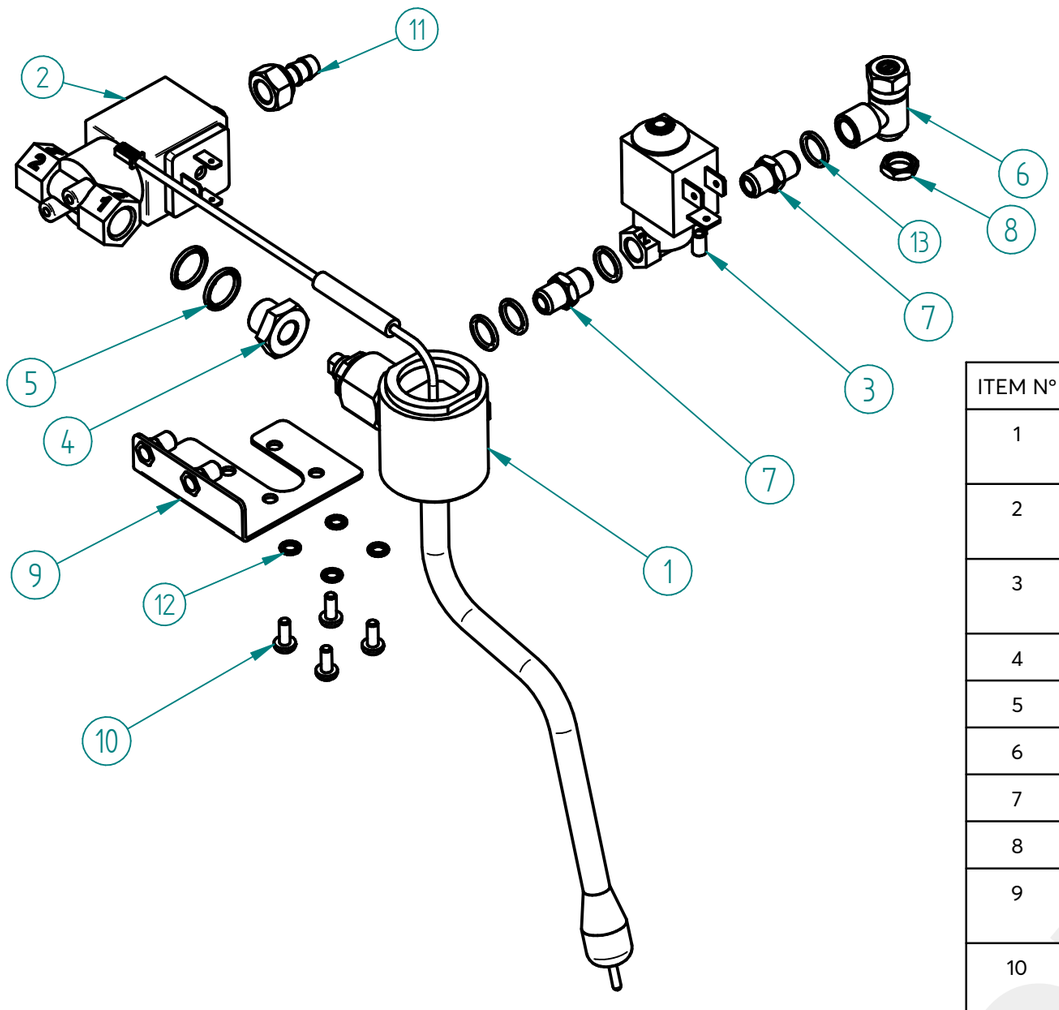

ITEM Nº	CÓDIGO	DESIGNAÇÃO	DESIGNATION	QUANT.
1	4.0.016.2040	TUBO TORNEIRA VAPOR C/ SONDA ATLANTIC TALL CUPS	STEAM TAP PIPE W/ PROBE ATLANTIC TC	1
2	5.0.000.0120	ELECTROVALVULA 3 VIAS 220-240V /50HZ-G1/4F-G1/4F-G1/8	220-240V 3 WAY ELECTROVALVE	1
3	4.0.002.0041	ELECTROVALVULA 2 VIAS 230V-ENT. AGUA MARINA	2 WAYS ELECTROVALVE	1
4	4.0.160.0060	RACORD SONDA G1/4 NIQ.	PROBE RACORD G1/4	1
5	4.0.000.0013	ANILHA 13x17MM (G1/4) COBRE	GASKET G1/4 CU	2
6	4.0.000.0124	REGULADOR AR G1/8-G1/8F	AIR REGULATER G1/8-G1/8F	1
7	5.0.000.0725	RACORD G1/8-G1/8 NIQ.	RACORD G1/8-G1/8 NIQ.	2
8	4.0.000.0046	PORCA G1/8 LATAO NIQ.	BRASS NUT G1/8	1
9	7.0.007.0205	SUPORTE TORNEIRA VAPOR C/ SONDA COMPASS	STEAM TAP SUPPORT COMPASS	1
10	4.2.000.9055	PARAFUSO CAB. PH M4X10 ZINC. DIN7985	ZINC-PLATED PHILLIPS HEAD SCREW M4X10	4
11	4.0.000.0198	RACORD DESCARGA ELECTROVALVULA	ELECTROVALVE DRAINAGE RACCORD	1
12	4.2.000.9135	ANILHA RECART. M4 ZINC. DIN6798A	ZINC-PLATED TOOTHED WASHER M4 DIN6798A	4
13	5.0.025.3193	ANILHA 10X15MM (G1/8) COBRE	COPPER WASHER 10X15MM (G1/8)	4

99 -7.0.007.0128-A - MOTOR EXTERIOR BOMBA CONJ. RPM

99 - EXTERNAL MOTOR PUMP

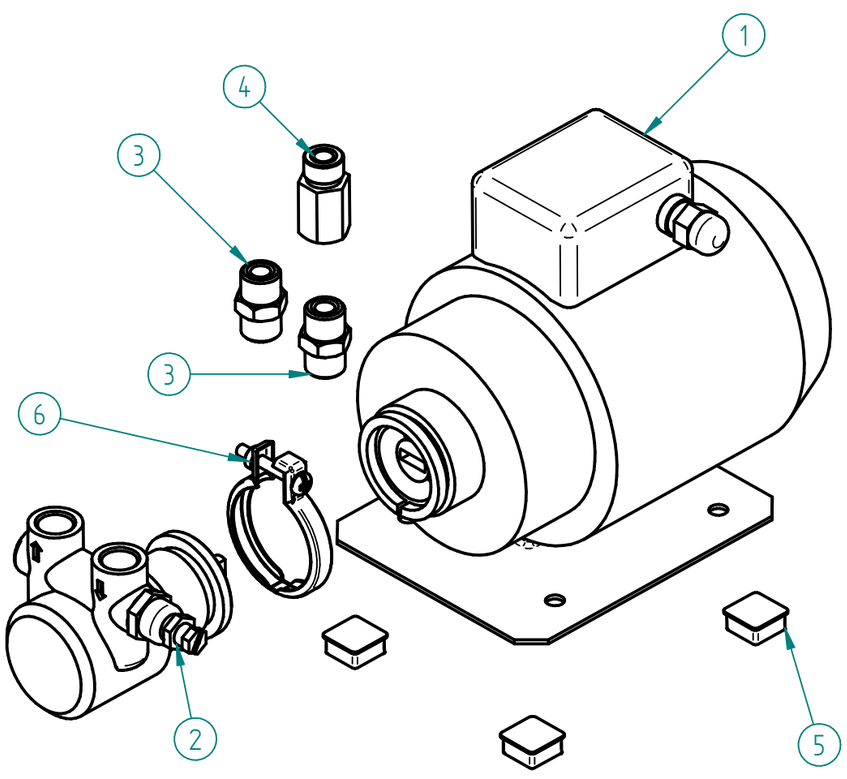

ITEM Nº	CÓDIGO	DESIGNAÇÃO	DESIGNATION	QUANT.
1	5.0.000.0467	MOTOR RPM EXTERIOR 220/230V-60/50HZ 300W	MOTOR RPM OUTDOOR 220/230V-60/50HZ 300W	1
2	5.0.000.0040	BOMBA AGUA	WATER PUMP	1
3	4.0.000.0115	RACORD G3/8-G3/8 (BOMBA)	PUMP´S METAL SLEEVE	2
4	4.0.000.0040	PORTA FILTRO ENT. AGUA C/ FILTRO NIPLESS	FILTER HOLDER OF WATER INLET	1
5	4.0.007.0013	PE ADESIVO P/ MOTOR EXTERIOR	ADHESIVE FOOT	4

Management System ISO 9001:2015 TÜVRheinland CERTIFIED www.tuv.com ID 9108624282

www.fiamma.pt

This drawing may be altered without previous notice.
Os elementos deste desenho podem ser alterados sem aviso prévio.

MÁQ. CAFÉ COMPASS 2 MB

ESPRESSO COFFEE MACHINE COMPASS 2 MB

100 - 5.0.000.0630 - PORTA FILTRO INOX CONJ. RST BRANCO - 2 BICAS

100 - FILTER HOLD. STAINLESS ST ASSEMB. RST WHITE - 2 COFFEE CUP

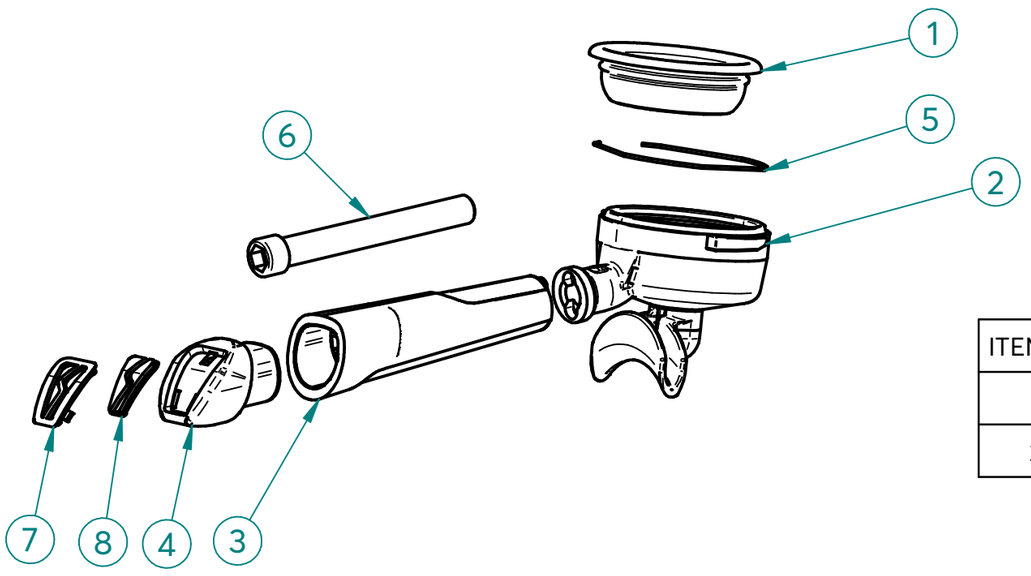

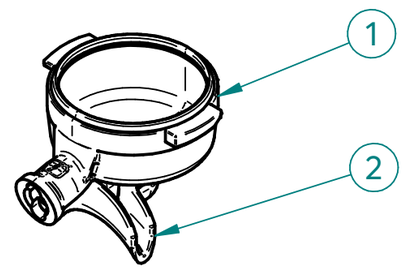

ITEM Nº	CÓDIGO	DESIGNAÇÃO	DESIGNATION	QUANT.
1	4.0.000.0752	CORPO PORTA FILTRO INOX	BODY FILTER HOLDER STAINLESS STEEL	1
2	4.0.000.0754	DISTRIBUIDOR INOX 2 BICAS	DOUBLE SPOUT STAINLESS STEEL	1

ITEM Nº	CÓDIGO	DESIGNAÇÃO	DESIGNATION	QUANT.
1	5.0.000.0173	FILTRO 2 BICAS 12 GR	2 COFFEES FILTER 12 GR	1
2	4.0.000.0751	PORTA FILTRO INOX 2 BICAS	FILTER HOLD. STAINLESS ST - 2 COFFEE CUP	1
3	4.0.007.0160-A	PUNHO PORTA FILTRO RST NV	FILTER HOLDER HANDLE RST NV	2
4	4.0.007.0163	TAMPAO CROMADO PUNHO PORTA FILTRO RST NV	CHROME FILTER HOLDER HANDLE RST	1
5	5.0.000.0411	MOLA PORTA FILTRO 1,2MM	FILTER HOLDER SPRING	1
6	4.0.007.0149	PARAFUSO UMBR. M12X100 ZINC. DIN912	CYLIND. HEAD SCREW W/ HEX. SOCKET M12X100 ZINC. DIN912	1
7	4.0.007.0166	INSERTO TAMPAO PUNHO PORTA FILTRO RST NV	INSERT FILTER HOLDER HANDLE RST	1
8	4.0.007.0170	SIMBOLO FIAMMA BRANCO PUNHO PORTA FILTRO RST NV	WHITE SYMBOL FIAMMA FILTER HOLDER HANDLE RST	1

101 - 5.0.000.0627-A - PORTA FILTRO INOX CONJ. RST BRANCO - 1 BICA

101 - FILTER HOLD. STAINLESS ST ASSEMB. RST WHITE - 1 COFFEE CUP

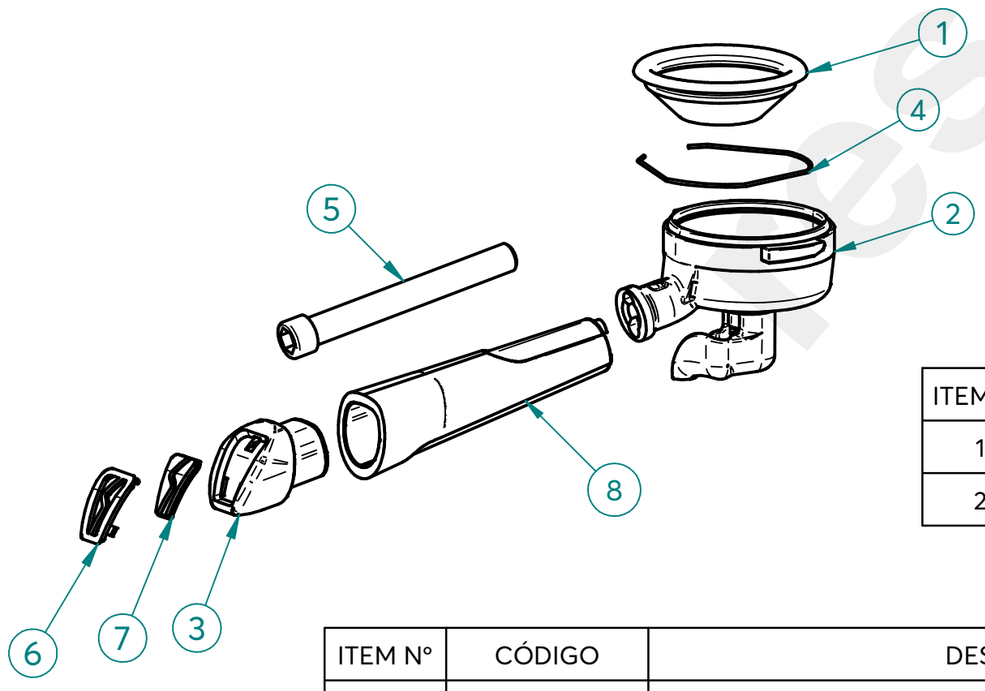

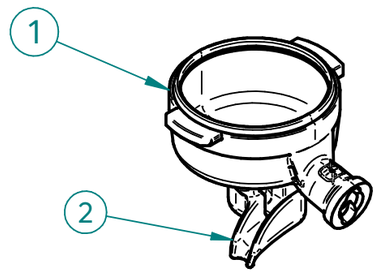

ITEM Nº	CÓDIGO	DESIGNAÇÃO	DESIGNATION	QUANT.
1	4.0.000.0752	CORPO PORTA FILTRO INOX	BODY FILTER HOLDER STAINLESS STEEL	1
2	4.0.000.0756	DISTRIBUIDOR INOX 1 BICA EM L	L SINGLE SPOUT TAINLESS STEEL	1

ITEM Nº	CÓDIGO	DESIGNAÇÃO	DESIGNATION	QUANT.
1	5.0.000.0162	FILTRO 1 BICA 6GR NV	6GR 1 CUP FILTER	1
2	4.0.000.0755	PORTA FILTRO INOX 1 BICA EM L	FILTER HOLD. STAINLESS ST - 1 COFFEE CUP IN L	1
3	4.0.007.0163	TAMPAO CROMADO PUNHO PORTA FILTRO RST NV	CHROME FILTER HOLDER HANDLE RST	1
4	5.0.000.0411	MOLA PORTA FILTRO 1,2MM	FILTER HOLDER SPRING	1
5	4.0.007.0149	PARAFUSO UMBR. M12X100 ZINC. DIN912	CYLIND. HEAD SCREW W/ HEX. SOCKET M12X100 ZINC. DIN912	1
6	4.0.007.0166	INSERTO TAMPAO PUNHO PORTA FILTRO RST NV	INSERT FILTER HOLDER HANDLE RST	1
7	4.0.007.0170	SIMBOLO FIAMMA BRANCO PUNHO PORTA FILTRO RST NV	WHITE SYMBOL FIAMMA FILTER HOLDER HANDLE RST	1
8	4.0.007.0160-A	PUNHO PORTA FILTRO RST NV	FILTER HOLDER HANDLE RST NV	1

Management System ISO 9001:2015 TÜVRheinland CERTIFIED www.tuv.com ID 9108624282

www.fiamma.pt

This drawing may be altered without previous notice.
Os elementos deste desenho podem ser alterados sem aviso prévio.

MB „Restoranų įranga“ · Vito Gerulaičio 1-59, LT-08200 Vilnius · +370 614 89888 · info@restoranu.eu · www.restoranu.eu

MÁQ. CAFÉ COMPASS 2 MB

ESPRESSO COFFEE MACHINE COMPASS 2 MB

ESQUEMA ELECTRICO

Electric Scheme

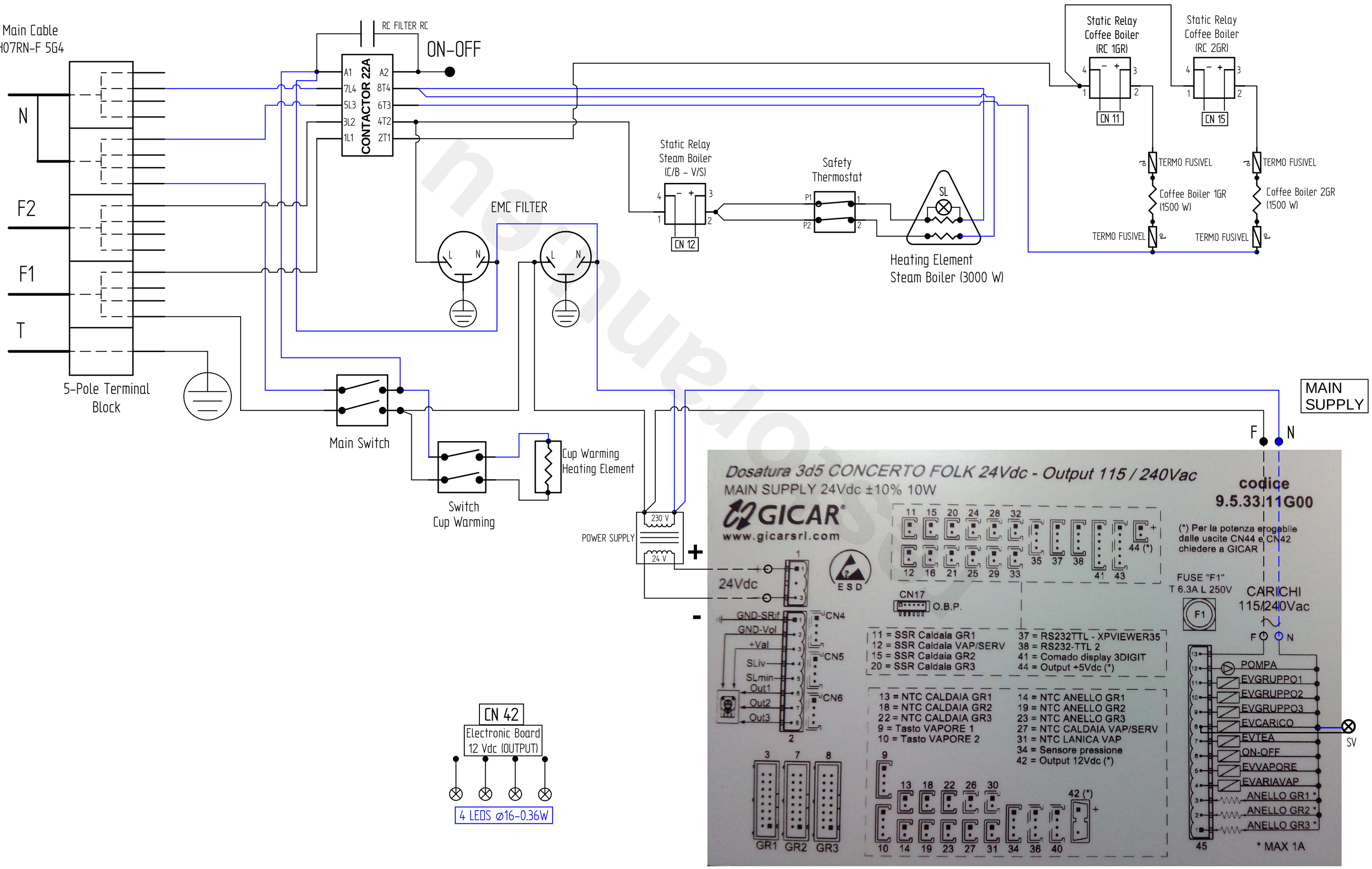

This drawing may be altered without previous notice.
Os elementos deste desenho podem ser alterados sem aviso prévio.

www.fiamma.pt

fiamma S

MB „Restoranų įranga" · Vito Gerulaičio 1-59, LT-08200 Vilnius · +370 614 89888 · info@restoranu.eu · www.restoranu.eu