Explosion Drawing
Desenho de Explosão





ESPRESSO COFFEE MACHINE • MÁQUINA CAFÉ ESPRESSO

COMPASS 2 SE WHITE
COMPASS 2 SE BLACK

COMPASS 2 SE TC WHITE
COMPASS 2 SE TC BLACK

20210317

www.fiamma.pt

This drawing may be altered without previous notice.
Os elementos deste desenho podem ser alterados sem aviso prévio.

MÁQ. CAFÉ COMPASS 2 SE

ESPRESSO COFFEE MACHINE COMPASS 2 SE

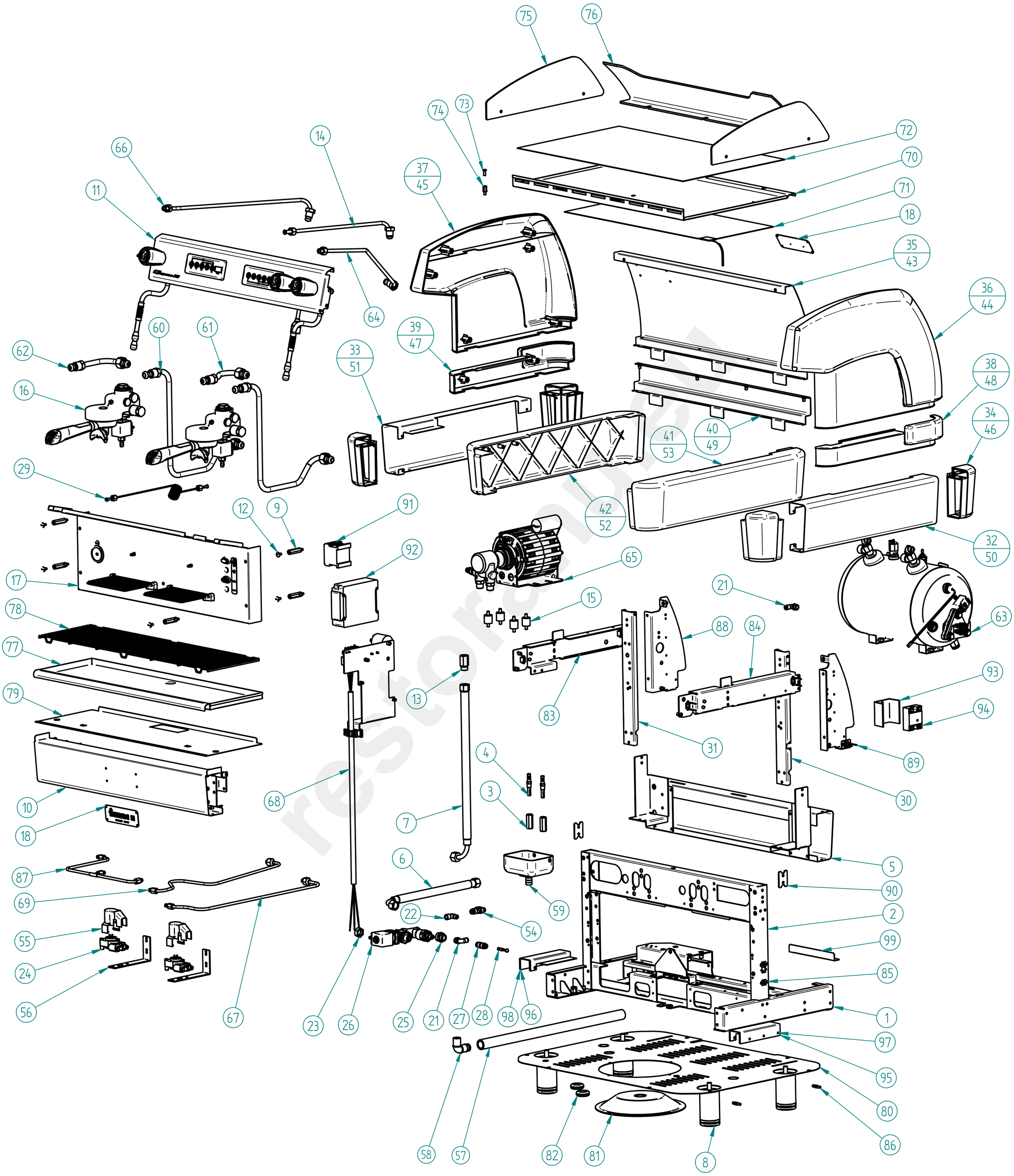

fiamma
RST
TÜVRheinland CERTIFIED
Management System ISO 9001:2015
www.tuv.com ID 9108624282
www.fiamma.pt
This drawing may be altered without previous notice.
Os elementos deste desenho podem ser alterados sem aviso prévio.

MÁQ. CAFÉ COMPASS 2 SE

ESPRESSO COFFEE MACHINE COMPASS 2 SE

LISTA DE COMPONENTES E ACESSÓRIOS
Spare parts list

ITEM Nº	CÓDIGO	DESIGNAÇÃO	DESIGNATION	QUANT.
1	7.0.017.5511	CHASSI HORIZONTAL ATLANTIC 2 ECC	HORIZONTAL CHASSIS ATLANTIC 2 ECC	1
2	7.0.017.5512	CHASSI VERTICAL ATLANTIC 2 ECC	VERTICAL CHASSIS ATLANTIC 2 ECC	1
3	4.0.000.0190	CAMPANULA DESCARGA GRUPO	OUTER RACORD OF THE DRAINAGE ASSEMBLY	2
4	4.0.000.0195	RACORD CAMPANULA DESCARGA GRUPO	INNER RACORD OF THE DRAINAGE ASSEMBLY	2
5	PRÉ-MONTAGEM	PM_PAINEL COMANDO INF POSTERIOR COMPASS 2 TC	LOWER REAR PANEL COMPASS 2	1
6	5.0.000.0912	TUBO LIGAÇAO BOMBA C/ CURVA 330MM	PUMP CONNECTION W/ ELBOW 330MM	1
7	4.0.000.0818	TUBO ALIMENTAÇÃO C/ CURVA 1500MM	WATER INLET PIPE 1500MM	1
8	4.0.000.0801	PE MAQ. DE CAFE 50X80	FEET FOR COFFE MACHINE 50X80	4
8**	4.0.000.0803	PE MAQ. DE CAFE 50X50	FEET FOR COFFEE MACHINE 50X50	4
9	4.0.028.0070	SEPARADOR BLINDAGEM ELECTROV. GRUPOS	SHIELD GROUP SEPARATOR	5
10	PRÉ-MONTAGEM	PM_PAINEL COMANDO INF. FRONTAL COMPASS 2 TC	LOWER FRONTAL PANEL COMPASS 2	1
11	PRÉ-MONTAGEM	PM_PAINEL COMANDO SUPERIOR CONJ. COMPASS 2 CVA TC	UPPER COMMAND PANEL ASS. COMPASS 2 DB	1
12	4.2.000.9115	PARAFUSO CAB. OVAL LARGA M5X10 INOX	SCREW M5X10	5
13	4.0.000.0040	PORTA FILTRO ENT. AGUA C/ FILTRO NIPLESS	FILTER HOLDER OF WATER INLET	1
14	7.0.000.0042	TUBO CALDEIRA TORN. VAPOR ESQ. ATLANTIC	TUBE BOILER/LEFT STEAM TAP	1
15	4.0.000.0032	APOIO MOTOR	MOTOR SUPPORT	4
16	PRÉ-MONTAGEM	GRUPO ECC-07 C/ ACESSORIOS	ECC-07 GROUP W/ ACESS.	2
17	PRÉ-MONTAGEM	PAINEL FRONTAL CONJ. COMPASS 2 SE TC	FRONT PANEL COMPASS 2 SE TC	1
18	4.0.000.0830	ETIQUETA INOX FIAMMA C/ FUROS	FIAMMA STAINLESS STEEL LABEL W/ HOLES	2
19*	4.0.007.0004	POSTIÇO 1 CANTO COMPASS	CORNER INSERT 1 COMPASS	3
20*	4.0.007.0005	POSTIÇO 2 CANTO COMPASS	CORNER INSERT 2 COMPASS	3
21	4.0.000.0109	RACORD L G1/4 TUBO TEFLON ⌀6	⌀6 G1/4 TEFLON TUBE L RACORD	2
22	5.0.000.0728	RACORD L G1/8-G1/8F	RACORD L G1/8-G1/8F	1
23	4.0.016.0014	TAMPAO G3/8F LATAO	BRASS COVER G3/8F	1
24	PRÉ-MONTAGEM	CONTADOR VOLUMETRICO CONJ. MÁQ. CAFE 2GR / 3GR	ASS. VOLUMETRIC DOSER 2/3CV	2
25	4.0.000.0116	RACORD G1/4F-G3/8F NIQ.	G1/4F-G3/8F NICKEL RACORD	1
26	7.0.016.0065	BLOCO ENTRADA AGUA ECC-07 (AUT.) CONJ.	WATER INLET ASS.	1
27	4.0.000.0097	CONECTOR RAPIDO TUBO ⌀6	FAST TUBE CONNECTOR ⌀6	1
28	4.0.000.0093	TAMPAO TUBO ⌀6	TUBE COVER ⌀6	1
29	7.0.000.0022	TUBO CAPILAR 1,27X2,5X1000	CAPILLARY TUBE	1
30	7.0.016.1055	CANTO POSTERIOR DIR. ATLANTIC NV	RIGHT REAR SUPPORT ATLANTIC NV	1
31	7.0.016.1054	CANTO POSTERIOR ESQ. ATLANTIC NV	LEFT REAR SUPPORT ATLANTIC NV	1
32	7.0.007.0505	PAINEL LATERAL INF. DIR. COMPASS WHITE	LOWER RIGHT SIDE PANEL COMPASS WHITE	1
33	7.0.007.0510	PAINEL LATERAL INF. ESQ. COMPASS WHITE	LOWER LEFT SIDE PANEL COMPASS WHITE	1
34	4.0.007.0091	CANTO COMPASS WHITE	CORNER COMPASS WHITE	4
35	7.0.007.0545	PAINEL POSTERIOR C/ FUROS COMPASS 2 WHITE	REAR PANEL W/ HOLES COMPASS 2 WHITE	1
36	4.0.007.0081	PAINEL LATERAL DIR. COMPASS WHITE	RIGHT SIDE PANEL COMPASS WHITE	1
37	4.0.007.0085	PAINEL LATERAL ESQ. COMPASS WHITE	LEFT SIDE PANEL COMPASS WHITE	1
38	4.0.007.0281	PAINEL LATERAL DIR. COMPASS TC WHITE	RIGHT SIDE PANEL COMPASS TC WHITE	1
39	4.0.007.0285	PAINEL LATERAL ESQ. COMPASS TC WHITE	LEFT SIDE PANEL COMPASS TC WHITE	1
40	7.0.007.0525	PAINEL POSTERIOR COMPASS 2 TC WHITE	REAR PANEL COMPASS 2 TC WHITE	1
41	4.0.007.0095	PAINEL LATERAL INF. DIR. COMPASS V24 WHITE	LOWER RIGHT SIDE PANEL COMPASS V24 WHITE	1
42	4.0.007.0097	PAINEL LATERAL INF. ESQ. COMPASS V24 WHITE	LOWER LEFT SIDE PANEL COMPASS V24 WHITE	1
43*	7.0.007.0546	PAINEL POSTERIOR C/ FUROS COMPASS 2 BLACK	REAR PANEL W/ HOLES COMPASS 2 BLACK	1
44*	4.0.007.0082	PAINEL LATERAL DIR. COMPASS BLACK	RIGHT SIDE PANEL COMPASS BLACK	1
45*	4.0.007.0086	PAINEL LATERAL ESQ. COMPASS BLACK	LEFT SIDE PANEL COMPASS BLACK	1
46*	4.0.007.0092	CANTO COMPASS BLACK	CORNER COMPASS BLACK	4
47*	4.0.007.0286	PAINEL LATERAL ESQ. COMPASS TC BLACK	LEFT SIDE PANEL COMPASS TC BLACK	1
48*	4.0.007.0282	PAINEL LATERAL DIR. COMPASS TC BLACK	RIGHT SIDE PANEL COMPASS TC BLACK	1
49*	7.0.007.0526	PAINEL POSTERIOR COMPASS 2 TC BLACK	REAR PANEL COMPASS 2 TC BLACK	1
50*	7.0.007.0506	PAINEL LATERAL INF. DIR. COMPASS BLACK	LOWER RIGHT SIDE PANEL COMPASS BLACK	1
51*	7.0.007.0511	PAINEL LATERAL INF. ESQ. COMPASS BLACK	LOWER LEFT SIDE PANEL COMPASS BLACK	1
52*	4.0.007.0098	PAINEL LATERAL INF. ESQ. COMPASS V24 BLACK	LOWER LEFT SIDE PANEL COMPASS V24 BLACK	1
53*	4.0.007.0096	PAINEL LATERAL INF. DIR. COMPASS V24 BLACK	LOWER RIGHT SIDE PANEL COMPASS V24 BLACK	1
54	4.0.000.0098	CONECTOR RAPIDO Y TUBO ⌀6	Y CONNECTOR TUBE ⌀6	1
55	5.0.000.1013	BLINDAGEM CONTADOR VOLUMETRICO	SHIELD VOLUMETRIC DOSER	2
56	7.0.007.0207	SUPORTE CONTADOR VOL. COMPASS MB	VOLUMETRIC DOSER SUPPORT	2
57	4.0.000.0222	TUBO ESGOTO	DRAIN TUBE	1
58	4.0.000.0845	RACORD L DEPOSITO ESGOTO PLASTICO	ANGLE RACORD	1
59	4.0.000.0840	DEPOSITO ESGOTO PLASTICO	DRAIN TRAY	1
60	5.0.000.0947	TUBO INFEROR CARTUCHO GRUPO 12mm	LOWER TUBE CARTRIDGE/GROUP 12MM	2
61	7.0.000.0054	TUBO SUP. CART. 1ºGR (DIR.) REVOL.	TUBE CARTRIDGE/GROUP	1
62	5.0.025.6484	TUBO SUP. CART. 2ºGR (ESQ/CENT) EVOL./3ºGR (ESQ) REVOL.	TUBE CARTRIDGE/GROUP	1
63	PRÉ-MONTAGEM	CALDEIRA 11LT C/ ACESS.	11T BOILER W/ ACESS.	1
64	7.0.000.0041	TUBO CALDEIRA TORN. AGUA ATLANTIC	TUBE BOILER/WATER TAP	1
65	7.0.007.0124	MOTOR GR. BOMBA CONJ.	PUMP-MOTOR ASS. RPM	1
66	7.0.000.0070	TUBO CALDEIRA TORN. VAPOR ESQ. V2	BOILER/LEFT STEAM TAP PIPE V2	1
67	4.2.000.0114	TUBO CONT. VOL. INJECTOR ESQ. SUPERIOR (2GR/3GR) NV	TUBE VOL. DOSER/INJECTOR NV	1
68	7.0.507.0101	CABO H07RN-F 3G2,5-1,8MT CONJ. COMPASS 2 SE	2GR COFFEE MACHINES CABLE H07RN-F 3G2,5 - 1,8MT	1
69	4.2.000.0115	TUBO CONT. VOL. INJECTOR DIR./CENT. SUPERIOR (2GR/3GR) NV	TUBE VOL. DOSER/INJECTOR NV	1
70	7.0.007.0086	TABULEIRO SUPERIOR COMPASS 2 NV2	UPPER TRAY COMPASS 2	1
71	5.0.000.0809-A	RESIST. ESCALDA CHAV. 530X230MM 75W 230V	HEATING ELEMENT FOR CUP HEATING	1
72	7.0.007.0089	GRELHA REDE 620X360	WIRE MESH GRID 620X360	1
73	4.2.000.9119	PARAFUSO CAB. EMB. PH M5X12 INOX DIN965	SCREW M5X12	1
74	4.0.007.0205	SEPARADOR TABULEIRO SUPERIOR COMPASS TC	UPPER TRAY SEPARATOR COMPASS TC	1
75	4.0.007.0009	ACRILICO LATERAL DIR. COMPASS	ACRYLIC RIGHT SIDE COMPASS	2
76	4.0.007.0011	ACRILICO POSTERIOR COMPASS 2	REAR ACRYLIC COMPASS 2	1
77	7.0.007.0081	TABULEIRO INFERIOR COMPASS 2	LOWER TRAY COMPASS 2	1
78	4.0.007.0150	GRELHA TABULEIRO INF. ARAME COMPASS 2	WIRE TRAY GRID COMPASS 2	1
79	7.0.007.0080	BLINDAGEM INFERIOR TAB. INF. COMPASS 2	COMPASS 2 LOWER TRAY SHIELDING	1
80	7.0.007.0293	BLINDAGEM FUNDO NV COMPASS 2 TC	BOTTOM SHIELD NV COMPASS 2 TC	1
80**	7.0.007.0091	BLINDAGEM FUNDO COMPASS 2	EXIT BOTTOM SHIELD COMPASS 2	
81	4.0.007.0207	SAIDA BLINDAGEM FUNDO COMPASS TC	EXIT BOTTOM SHIELD COMPASS TC	1
82	4.0.000.0372	PASSA FIOS P/ FURO ⌀25MM	WIRE PROTECTION	3
83	7.0.007.0065-A	SUPORTE PAINEL LAT. SUP. ESQ. COMPASS	UPPER LEFT SIDE PANEL SUPPORT COMPASS	1
84	7.0.007.0064	SUPORTE PAINEL LAT. SUP. DIR. COMPASS	UPPER RIGHT SIDE PANEL SUPPORT COMPASS	1
85	4.0.025.0085	MOLA FIXADORA PAINEL LAT.	FIXER SPRING	6
86	4.0.025.0090	PERNO FIXACÇAO PAINEL LAT.	FIXER PIN	4
87	7.0.000.0102	TUBO BLOCO CONT. VOL. 2GR	TUBE DISTRIB. GROUP/VOL. DOSER 2GR	1
88	7.0.007.0022	SUPORTE PAINEL POST. ESQ. COMPASS	LEFT REAR PANEL SUPPORT COMPASS	1
89	7.0.007.0021	SUPORTE PAINEL POST. DIR. COMPASS	RIGHT REAR PANEL SUPPORT COMPASS	1
90	7.0.016.5519	CHAPA COMPENSAÇÃO CHASSI VERT. ATLANTIC ECC	COMPENSATION PLATE VERT. CHASSIS ATLANTIC ECC	2
91	4.0.091.0003	CONTACTOR 22A-AC1 BOBINE 230V	CONTACTOR 22A-AC1 230V	1
91	4.0.091.0001	CONTACTOR 22A-AC1 BOBINE 208V	CONTACTOR 22A-AC1 COIL 208V	1
92	4.0.000.0869	UNIDADE ELECTRONICA ESSENZA FULL RANGE 100-240V	ELECT. BOARD ESSENZA FULL RANGE 110-240V	1
93	7.0.007.0030	DISSIPADOR RELE ESTATICO	RELAY HEATSINK	1
94	4.0.000.0991	RELE ESTATICO 25A	25A SOLID STATE RELAY	1
95	7.0.007.0210	GUIA DIREITO TABULEIRO INFERIOR COMPASS TC	LOWER TRAY RIGHT GUIDE COMPASS TC	1
96	7.0.007.0211	GUIA ESQUERDO TABULEIRO INFERIOR COMPASS TC	LOWER TRAY LEFT GUIDE COMPASS TC	1
97	7.0.007.0212	GUIA DIREITO TABULEIRO INFERIOR COMPASS	LOWER TRAY RIGHT GUIDE COMPASS	1
98	7.0.007.0213	GUIA ESQUERDO TABULEIRO INFERIOR COMPASS	LOWER TRAY LEFT GUIDE COMPASS	1
99*	7.0.007.0270	PROTECÇAO INTERRUPTOR GERAL COMPASS TC	SWTICH PROTETION COMPASS TC	1

**** - COMPONENTES USADOS NAS VERSÕES GRUPOS BAIXOS / *PARTS USED IN LOW CUPS VERSIONS***

Management System ISO 9001:2015 TÜVRheinland CERTIFIED www.tuv.com ID 9108624282

www.fiamma.pt

This drawing may be altered without previous notice.
Os elementos deste desenho podem ser alterados sem aviso prévio.

MB „Restoranų įranga“ · Vito Gerulaičio 1-59, LT-08200 Vilnius · +370 614 89888 · info@restoranu.eu · www.restoranu.eu

MÁQ. CAFÉ COMPASS 2 SE

ESPRESSO COFFEE MACHINE COMPASS 2 SE

5 - PAINEL POSTERIOR INF. CONJ. COMPASS 2

5 - REAR LOWER PANEL COMPASS 2

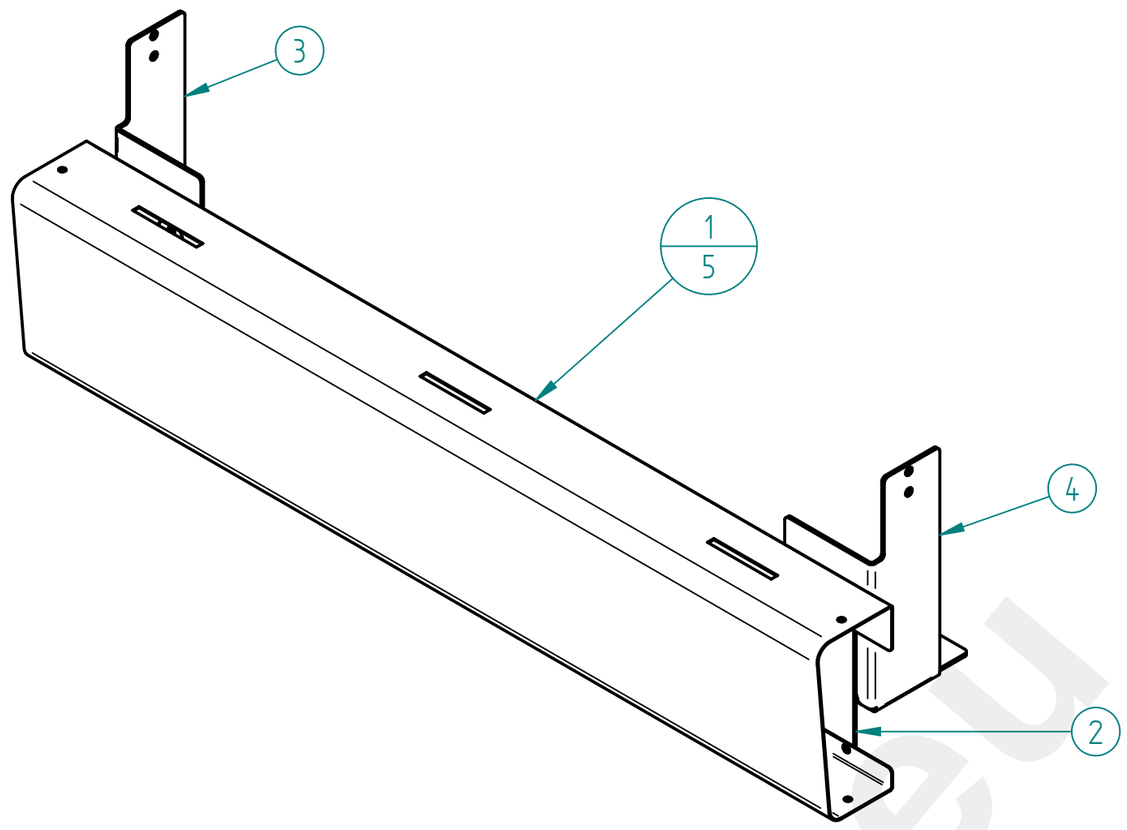

ITEM Nº	CÓDIGO	DESIGNAÇÃO	DESIGNATION	QUANT.
1	7.0.007.0516	PAINEL POSTERIOR INF. COMPASS 2 BLACK	LOWER REAR PANEL COMPASS 2 BLACK	1
2	7.0.007.0015	REFORCO PAINEL POST. INF. COMPASS	REAR PANEL LOWER COMPASS	2
3	7.0.007.0016	FIXADOR PAINEL POST. INF. DIR. COMPASS	RIGHT REAR PANEL LOWER FASTENER	1
4	7.0.007.0017	FIXADOR PAINEL POST. INF. ESQ. COMPASS	LEFT REAR PANEL LOWER FASTENER	1
5*	7.0.007.0515	PAINEL POSTERIOR INF. COMPASS 2 WHITE	LOWER REAR PANEL COMPASS 2 WHITE	1

10 - PAINEL FRONTAL INF. CONJ. COMPASS 2

10 - FRONT LOWER PANEL COMPASS 2

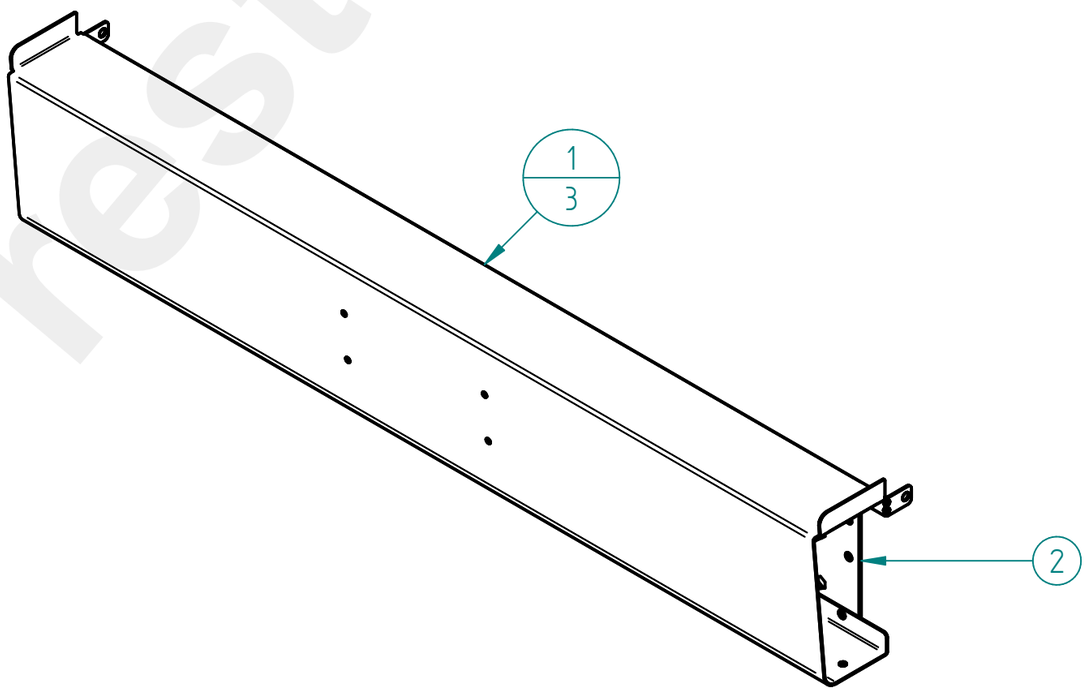

ITEM Nº	CÓDIGO	DESIGNAÇÃO	DESIGNATION	QUANT.
1	7.0.007.0540	PAINEL FRONTAL INF. C/ FUROS COMPASS 2 WHITE	LOWER FRONTAL PANEL W/ HOLES COMPASS 2 WHITE	1
2	7.0.007.0010	REFORÇO PAINEL FRONTAL INF. COMPASS	FRONT PANEL LOWER SUPPORT	2
3*	7.0.007.0540	PAINEL FRONTAL INF. C/ FUROS COMPASS 2 BLACK	LOWER FRONTAL PANEL W/ HOLES COMPASS 2 BLACK	1

restored

MÁQ. CAFÉ COMPASS 2 SE

ESPRESSO COFFEE MACHINE COMPASS 2 SE

11 – PAINEL COMANDO SUPERIOR CONJ. COMPASS 2 SE

11- UPPER COMMAND PANEL ASS. COMPASS 2 SE

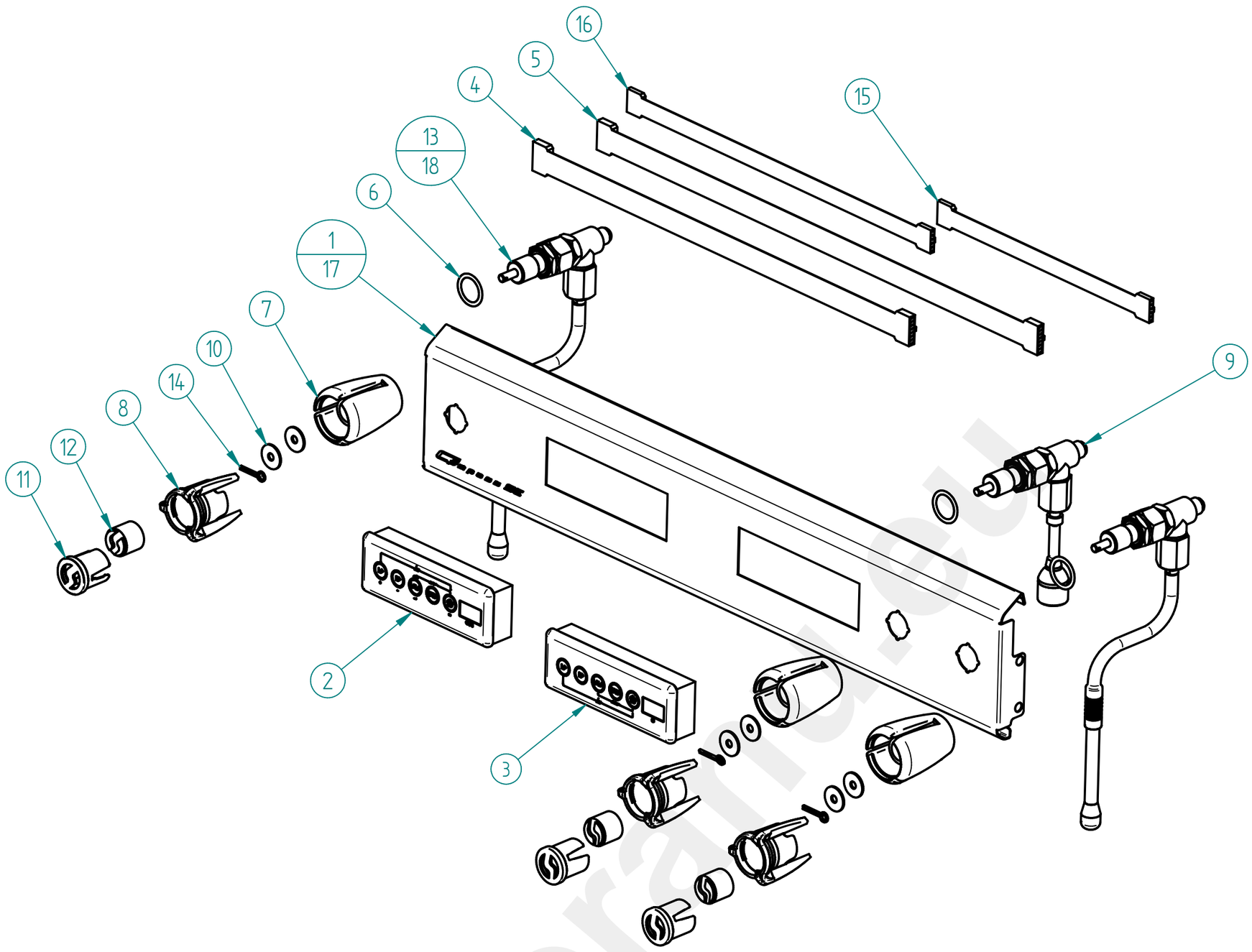

ITEM Nº	CÓDIGO	DESIGNAÇÃO	DESIGNATION	QUANT.
1	7.0.507.0065	PAINEL COMANDO SUP. COMPASS 2 SE NV BLACK C/ GRAVAÇAO	COMPASS 2 SE UPPER PANEL WITHOUT PLAST	1
2	4.0.000.1040	TECLADO 5T+3 DIGITOS 1ºGR FIAMMA	PUSH-BUTTON PANEL 5 BUTTONS+3 DIGIT 1ºGR FIAMMA	1
3	4.0.000.1042	TECLADO 5T+3 DIGITOS 2ºGR/3ºGR FIAMMA	PUSH-BUTTON PANEL 5 BUTTONS+3 DIGIT 2º/3ºGR FIAMMA	1
4	4.0.000.0971	CABO UNIDADE ELECTR. TECLADO 16 PIN 600MM	CABLE FOR ELECTR. UNIT KEYBOARD 16 PIN 600MM	1
5	4.0.000.0972	CABO UNIDADE ELECTR. TECLADO 16 PIN 850MM	CABLE FOR ELECTR. UNIT KEYBOARD 16 PIN 850MM	1
6	4.0.000.0011	ANILHA 20X26MM (G1/2) COBRE	GASKET G1/2 CU	3
7	4.0.007.0126	CORPO MANIPULO TORN. MEIA VOLTA ECC-23 RST	BODY TAP KNOB RST	3
8	4.0.007.0129	ANEL PRETO MAN. TORN. RST	BLACK RING TAP KNOB RST	3
9	7.0.007.0165	TORNEIRA MEIA VOLTA ECC-23 RST (CONJ. AGUA)	WATER TAP ASS. ECC-23 RST	1
10	4.0.016.0026	ANILHA LATAO 1,3MM MAN. TORN. ECC-07	MS WASHER 1,3MM	6
11	4.0.007.0131	TAMPAO MAN. TORN. RST	FILTER HOLDER HANDLE TAP	3
12	4.0.007.0135	SIMBOLO FIAMMA BRANCO MAN. TORN. RST	WHITE SYMBOL FIAMMA TAP KNOB RST	3
13	7.0.007.0163	TORNEIRA MEIA VOLTA ECC-23 RST (CONJ. VAPOR) COMPASS	STEAM TAP ASS. ECC-23 RST COMPASS	2
14	4.0.016.0025	GOLPILHA INOX MAN. TORN. ECC-07	TAP ECC-07 LOCKER	3
15	4.0.007.0048	CABO DISPLAY 3 DIGIT DISPLAY 3 DIGIT 6 PIN 400MM	DISPLAY CABLE 3 DIGIT 6 PIN 400MM	1
16	4.0.007.0047	CABO UNIDADE ELECTR. DISPLAY 3 DIGIT 6 PIN 650MM	DISPLAY/CONTROL BOX CABLE 3 DIGIT 6 PIN 650MM	1
17*	7.0.507.0066	PAINEL COMANDO SUP. COMPASS 2 SE NV WHITE C/ GRAVAÇAO	COMPASS 2 SE UPPER PANEL WITHOUT PLAST	1
18**	7.0.016.0077	TORNEIRA MEIA VOLTA ECC-23 RST (CONJ. VAPOR)	STEAM TAP ASS. ECC-23 RST	2

*** - PAINEL COMANDO USADO NA VERSÕES WHITE /** ***CONTROL PANEL USED IN WHITE VERSIONS***

**** - TORNEIRA USADA NAS VERSÕES GRUPOS BAIXOS /** ***TAP USED IN LOW CUPS VERSIONS***

Management System ISO 9001:2015 TÜVRheinland CERTIFIED www.tuv.com ID 9108624282

www.fiamma.pt

This drawing may be altered without previous notice.
Os elementos deste desenho podem ser alterados sem aviso prévio.

MÁQ. CAFÉ COMPASS 2 SE

ESPRESSO COFFEE MACHINE COMPASS 2 SE

9 - 7.0.007.0165 - TORNEIRA MEIA VOLTA ECC-23 RST(CONJ. AGUA)

9 - WATER TAP ASS. ECC-23

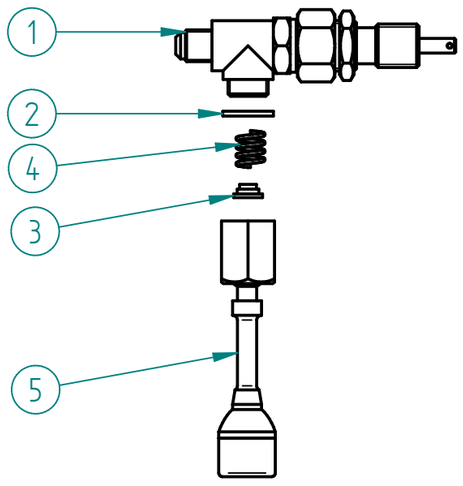

ITEM Nº	CODIGO	DESIGNAÇÃO	DESIGNATION	QUANT.
1	4.0.007.0124	TORNEIRA MEIA VOLTA ECC-23 RST	ECC-23 TAP RST	1
2	5.0.025.1386	JUNTA TEFLON 21X16,8X2	TEFLON GASKET	1
3	5.0.025.6508	GUIA MOLA TUBO AGUA/VAPOR TORN. EVOL.	GUIDE BUSH	1
4	5.0.025.7060	MOLA TUBO AGUA/VAPOR TORN. EVOL.	SPRING TAP	1
5	5.0.016.0330	TUBO TORNEIRA AGUA ATLANTIC (CONJ.)	WATER TAP TUBE ASS.	1

OPCIONAL:

9 - 7.0.007.0155 - TORNEIRA ALAVANCA G1/4-G3/8 RST (CONJ. AGUA)

9 - WATER TAP G1/4-G3/8 RST

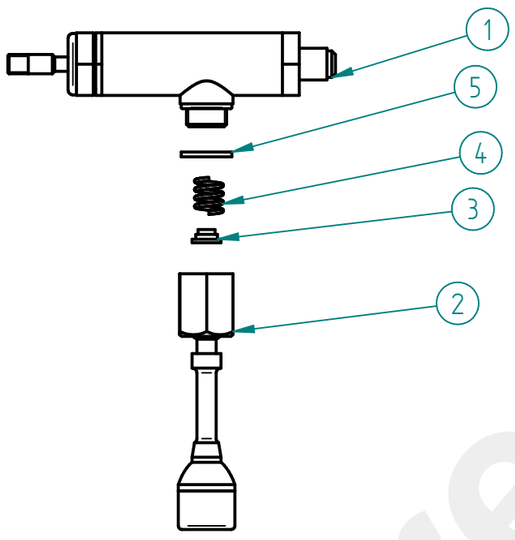

ITEM Nº	CÓDIGO	DESIGNAÇÃO	DESIGNATION	QUANT.
1	5.0.007.0010	TORNEIRA ALAVANCA G1/4-G3/8 RST	LEVER TAP G1/4-G3/8 RST	1
2	5.0.016.0330	TUBO TORNEIRA AGUA ATLANTIC (CONJ.)	WATER TAP TUBE ASS.	1
3	5.0.025.6508	GUIA MOLA TUBO AGUA/VAPOR TORN. EVOL.	GUIDE BUSH	1
4	5.0.025.7060	MOLA TUBO AGUA/VAPOR TORN. EVOL.	SPRING TAP	1
5	5.0.025.1386	JUNTA TEFLON 21X16,8X2	TEFLON GASKET	1

PEÇAS P/ ADAPTADOR MANIPULO / TAP KNOB ADAPTER PARTS

CÓDIGO	DESIGNAÇÃO	DESIGNATION	QUANT.
5.0.007.0011-A	RACORD ADAPT. TR18X4A2P-M8F TORN. ALAVANCA RST	RACORD ADAPT. LEVER TAP RST	1
5.0.007.0012	PARAFUSO SEM CAB. UMBR. M8X10 ZINC. DIN916	ZINC-PLATED SOCKET SET SCREW M8X10 DIN916	1
4.0.007.0126	CORPO MANIPULO TORN. RST	BODY TAP KNOB RST	1



restoranu.eu

MÁQ. CAFÉ COMPASS 2 SE

ESPRESSO COFFEE MACHINE COMPASS 2 SE

MÁQUINAS GRUPOS ALTOS / TALL CUPS MACHINES

13 - 7.0.007.0163 - TORNEIRA MEIA VOLTA ECC-23 RST (CONJ. VAPOR) COMPASS

13 - STEAM TAP ECC-23 ASSEMB. COMPASS

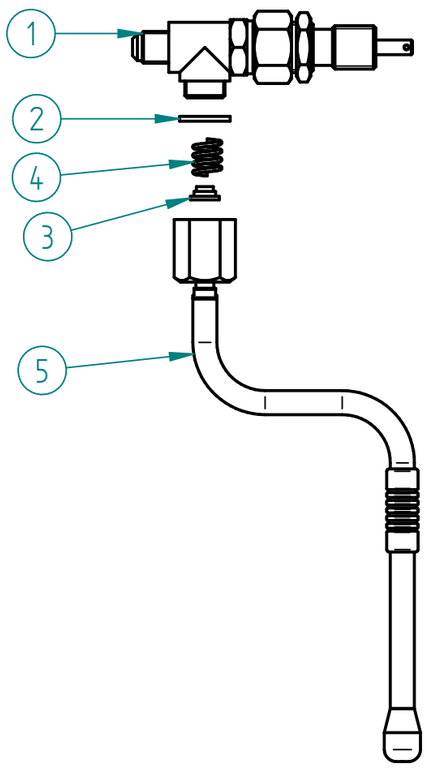

ITEM Nº	CODIGO	DESIGNAÇÃO	DESIGNATION	QUANT.
1	4.0.007.0124	TORNEIRA MEIA VOLTA ECC-23 RST	ECC-23 TAP RST	1
2	5.0.025.1386	JUNTA TEFLON 21X16,8X2	TEFLON GASKET	1
3	5.0.025.6508	GUIA MOLA TUBO AGUA/VAPOR TORN. EVOL.	GUIDE BUSH	1
4	5.0.025.7060	MOLA TUBO AGUA/VAPOR TORN. EVOL.	SPRING TAP	1
5	5.0.007.0320	TUBO TORNEIRA VAPOR COMPASS (CONJ.)	STEAM TAP PIPE ASSEMB. COMPASS	1

OPCIONAL:

13 - 7.0.007.0160 - TORNEIRA MEIA VOLTA ECC-23 RST (CONJ. VAPOR) COOL TOUCH

13 - STEAM TAP ECC-23 ASSEMB. COOL TOUCH

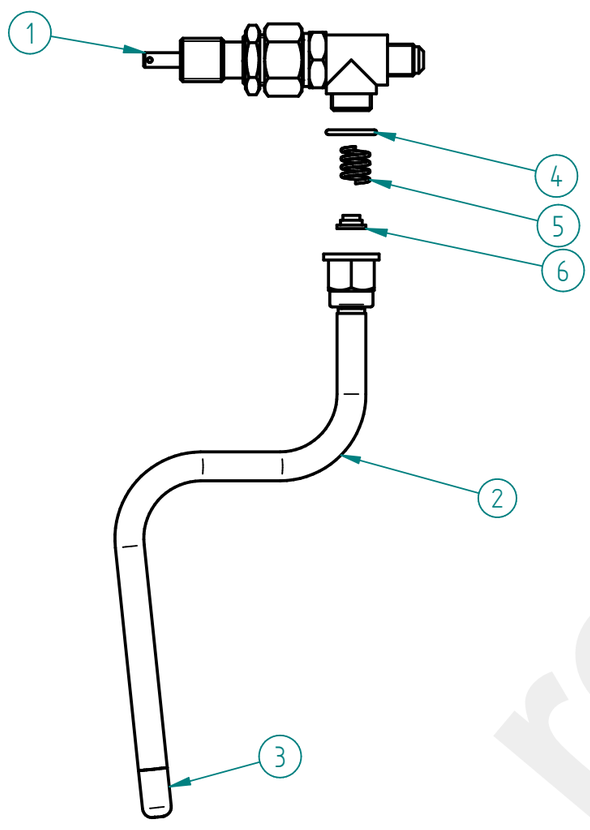

ITEM Nº	CÓDIGO	DESIGNAÇÃO	DESIGNATION	QUANT.
1	4.0.007.0124	TORNEIRA MEIA VOLTA ECC-23 RST	ECC-23 TAP RST	1
2	5.0.028.0340	TUBO TORNEIRA VAPOR COOL TOUCH (CONJ.)	COOL TOUCH STEAM TAP TUBE	1
3*	5.0.028.0345	ESPALHADOR VAPOR TORN. COOL TOUCH - 3 FUROS	SPRAYER OF THE COOL TOUCH STEAM TAP - 3 HOLES	1
4	5.0.028.0342	ORING 16X2 TUBO VAPOR COOL TOUCH	ORING 16X2 COOL TOUCH STEAM TUBE	1
5	5.0.028.0344	MOLA TUBO VAPOR COOL TOUCH	COOL TOUCH STEAM TUBE SPRING	1
6	5.0.028.0343	GUIA MOLA TUBO VAPOR COOL TOUCH	COOL TOUCH STEAM TUBE SPRING GUIDE	1

13 - 7.0.007.0153 -TORNEIRA ALAVANCA G1/4-G3/8 RST (CONJ. VAPOR) COMPASS

13 - STEAM TAP G1/4-G3/8 RST COMPASS

ITEM Nº	CÓDIGO	DESIGNAÇÃO	DESIGNATION	QUANT.
1	5.0.007.0010	TORNEIRA ALAVANCA G1/4-G3/8 RST	LEVER TAP G1/4-G3/8 RST	1
2	5.0.025.1386	JUNTA TEFLON 21X16,8X2	TEFLON GASKET	1
3	5.0.025.6508	GUIA MOLA TUBO AGUA/VAPOR TORN. EVOL.	GUIDE BUSH	1
4	5.0.025.7060	MOLA TUBO AGUA/VAPOR TORN. EVOL.	SPRING TAP	1
5	5.0.007.0320	TUBO TORNEIRA VAPOR COMPASS (CONJ.)	STEAM TAP PIPE ASSEMB. COMPASS	1

PEÇAS P/ ADAPTADOR MANIPULO / TAP KNOB ADAPTER PARTS

CÓDIGO	DESIGNAÇÃO	DESIGNATION	QUANT.
5.0.007.0011-A	RACORD ADAPT. TR18X4A2P-M8F TORN. ALAVANCA RST	RACORD ADAPT. LEVER TAP RST	1
5.0.007.0012	PARAFUSO SEM CAB. UMBR. M8X10 ZINC. DIN916	ZINC-PLATED SOCKET SET SCREW M8X10 DIN916	1
4.0.007.0126	CORPO MANIPULO TORN. RST	BODY TAP KNOB RST	1



Management System ISO 9001:2015
TÜVRheinland CERTIFIED
www.tuv.com ID 9108624282

www.fiamma.pt

This drawing may be altered without previous notice.
Os elementos deste desenho podem ser alterados sem aviso prévio.

MÁQ. CAFÉ COMPASS 2 SE

ESPRESSO COFFEE MACHINE COMPASS 2 SE

13 – 7.0.007.0150 –TORNEIRA ALAVANCA G1/4–G3/8 RST (CONJ. VAPOR) COOL TOUCH

13 – STEAM TAP COOL TOUCH G1/4–G3/8 RST

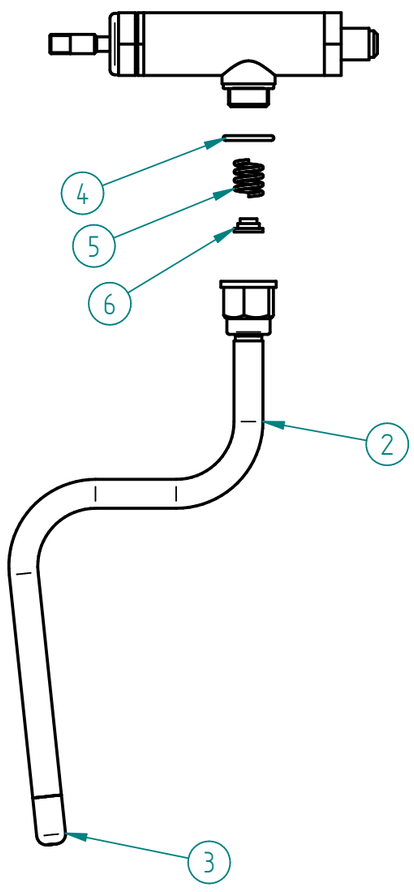

ITEM Nº	CÓDIGO	DESIGNAÇÃO	QUANT.
1*	5.0.007.0010	TORNEIRA ALAVANCA G1/4–G3/8 RST	1
2	5.0.028.0340	TUBO TORNEIRA VAPOR COOL TOUCH (CONJ.)	1
3*	5.0.028.0345	ESPALHADOR VAPOR TORN. COOL TOUCH – 3 FUROS	1
4	5.0.028.0342	ORING 16X2 TUBO VAPOR COOL TOUCH	1
5	5.0.028.0344	MOLA TUBO VAPOR COOL TOUCH	1
6	5.0.028.0343	GUIA MOLA TUBO VAPOR COOL TOUCH	1

PEÇAS P/ ADAPTADOR MANIPULO / TAP KNOB ADAPTER PARTS

CÓDIGO	DESIGNAÇÃO	DESIGNATION	QUANT.
5.0.007.0011-A	RACORD ADAPT. TR18X4A2P-M8F TORN. ALAVANCA RST	RACORD ADAPT. LEVER TAP RST	1
5.0.007.0012	PARAFUSO SEM CAB. UMBR. M8X10 ZINC. DIN916	ZINC-PLATED SOCKET SET SCREW M8X10 DIN916	1
4.0.007.0126	CORPO MANIPULO TORN. RST	BODY TAP KNOB RST	1



MÁQUINAS GRUPOS BAIXOS / LOW CUPS MACHINES

18 – 7.0.016.0077 – TORNEIRA MEIA VOLTA ECC-23 (CONJ. VAPOR)

18 – STEAM TAP ASS. ECC-23

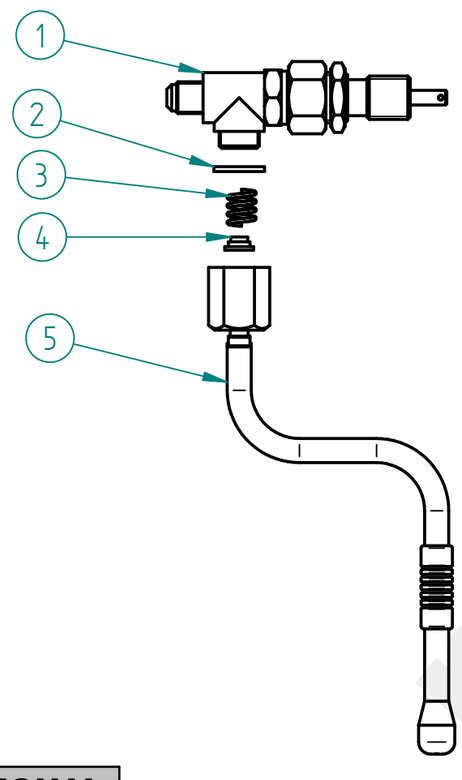

ITEM Nº	CÓDIGO	DESIGNAÇÃO	DESIGNATION	QUANT.
1	4.0.007.0124	TORNEIRA MEIA VOLTA ECC-23 RST	ECC-23 TAP RST	1
2	5.0.025.1386	JUNTA TEFLON 21X16,8X2	TEFLON GASKET	1
3	5.0.025.7060	MOLA TUBO AGUA/VAPOR TORN. EVOL.	SPRING TAP	1
4	5.0.025.6508	GUIA MOLA TUBO AGUA/VAPOR TORN. EVOL.	GUIDE BUSH	1
5	5.0.016.0320	TUBO TORNEIRA VAPOR ATLANTIC (CONJ.)	STEAM TAP TUBE ASS.	1

OPCIONAL:

18 – 7.0.007.0161 – TORNEIRA MEIA VOLTA ECC-23 RST (CONJ. VAPOR) COOL TOUCH LC

18 – STEAM TAP COOL TOUCH LC ASS. ECC-23

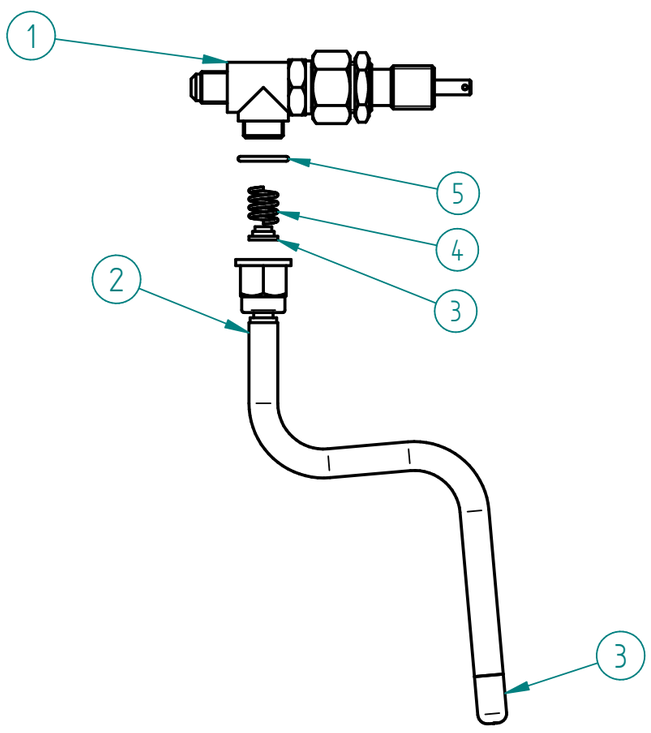

ITEM Nº	CÓDIGO	DESIGNAÇÃO	DESIGNATION	QUANT.
1	4.0.007.0124	TORNEIRA MEIA VOLTA ECC-23 RST	ECC-23 TAP RST	1
2	5.0.007.0340-A	TUBO TORNEIRA VAPOR COOL TOUCH (CONJ.) LOW CUPS	COOL TOUCH STEAM TAP TUBE	1
3	5.0.028.0343	GUIA MOLA TUBO VAPOR COOL TOUCH	COOL TOUCH STEAM TUBE SPRING GUIDE	1
4	5.0.028.0344	MOLA TUBO VAPOR COOL TOUCH	COOL TOUCH STEAM TUBE SPRING	1
5	5.0.028.0342	ORING 16X2 TUBO VAPOR COOL TOUCH	ORING 16X2 COOL TOUCH STEAM TUBE	1
6*	5.0.028.0345	ESPALHADOR VAPOR TORN. COOL TOUCH – 3 FUROS	SPRAYER OF THE COOL TOUCH STEAM TAP – 3 HOLES	1

restoranu.eu

MÁQ. CAFÉ COMPASS 2 SE

ESPRESSO COFFEE MACHINE COMPASS 2 SE

18 - 7.0.016.0075 -TORNEIRA ALAVANCA G1/4-G3/8 RST (CONJ. VAPOR)

18 - STEAM TAP ASS. G1/4-G3/8 RST

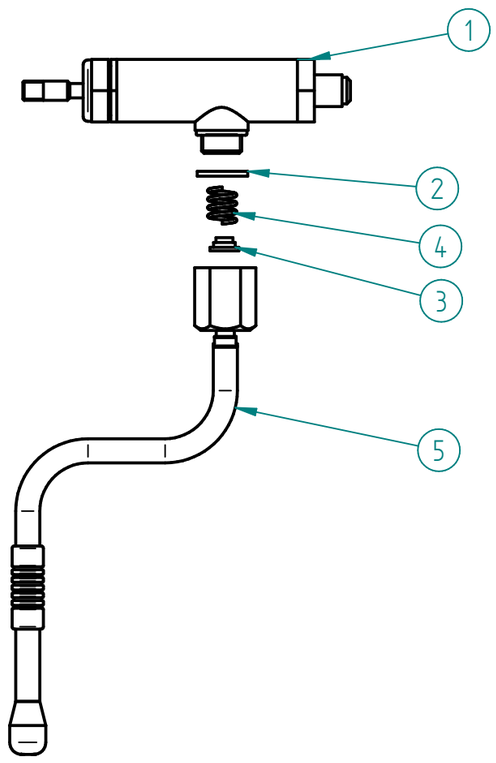

ITEM Nº	CÓDIGO	DESIGNAÇÃO	DESIGNATION	QUANT.
1	5.0.007.0010	TORNEIRA ALAVANCA G1/4-G3/8 RST	LEVER TAP G1/4-G3/8 RST	1
2	5.0.025.1386	JUNTA TEFLON 21X16,8X2	TEFLON GASKET	1
3	5.0.025.6508	GUIA MOLA TUBO AGUA/VAPOR TORN. EVOL.	GUIDE BUSH	1
4	5.0.025.7060	MOLA TUBO AGUA/VAPOR TORN. EVOL.	SPRING TAP	1
5	5.0.016.0320	TUBO TORNEIRA VAPOR ATLANTIC (CONJ.)	STEAM TAP TUBE ASS.	1

18 - 7.0.007.0151-A -TORNEIRA ALAVANCA G1/4-G3/8 RST (CONJ. VAPOR) COOL TOUCH LC

18 - STEAM TAP COOL TOUCH LC G1/4-G3/8 RST

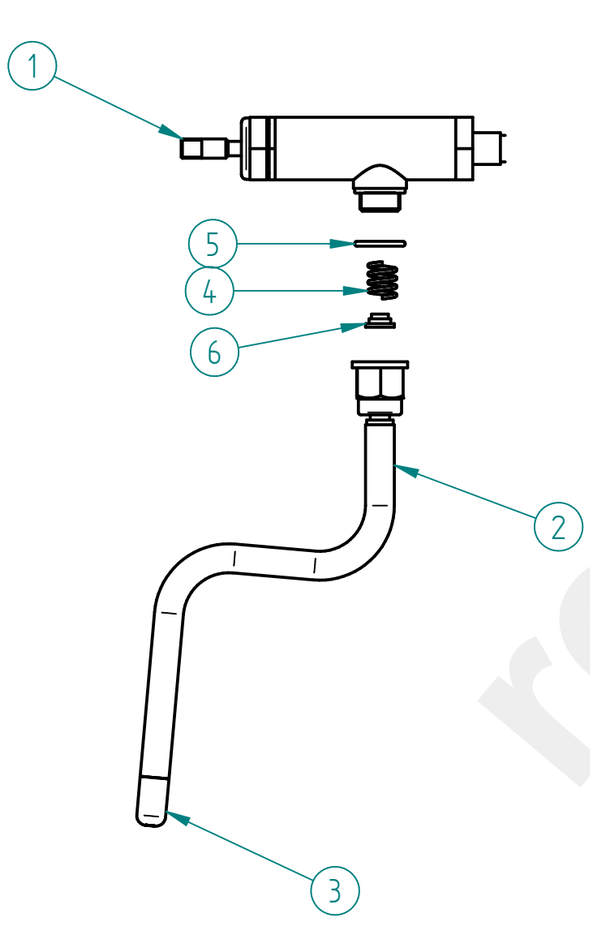

ITEM Nº	CÓDIGO	DESIGNAÇÃO	DESIGNATION	QUANT.
1	5.0.007.0010	TORNEIRA ALAVANCA G1/4-G3/8 RST	LEVER TAP G1/4-G3/8 RST	1
2	5.0.007.0340-A	TUBO TORNEIRA VAPOR COOL TOUCH (CONJ.) LOW CUPS	COOL TOUCH STEAM TAP TUBE	1
3*	5.0.028.0345	ESPALHADOR VAPOR TORN. COOL TOUCH - 3 FUROS	SPRAYER OF THE COOL TOUCH STEAM TAP - 3 HOLES	1
4	5.0.028.0344	MOLA TUBO VAPOR COOL TOUCH	COOL TOUCH STEAM TUBE SPRING	1
5	5.0.028.0342	ORING 16X2 TUBO VAPOR COOL TOUCH	ORING 16X2 COOL TOUCH STEAM TUBE	1
6	5.0.028.0343	GUIA MOLA TUBO VAPOR COOL TOUCH	COOL TOUCH STEAM TUBE SPRING GUIDE	1

PEÇAS P/ ADAPTADOR MANIPULO / TAP KNOB ADAPTER PARTS

CÓDIGO	DESIGNAÇÃO	DESIGNATION	QUANT.
5.0.007.0011-A	RACORD ADAPT. TR18X4A2P-M8F TORN. ALAVANCA RST	RACORD ADAPT. LEVER TAP RST	1
5.0.007.0012	PARAFUSO SEM CAB. UMBR. M8X10 ZINC. DIN916	ZINC-PLATED SOCKET SET SCREW M8X10 DIN916	1
4.0.007.0126	CORPO MANIPULO TORN. RST	BODY TAP KNOB RST	1



restoranu.eu

MÁQ. CAFÉ COMPASS 2 SE

ESPRESSO COFFEE MACHINE COMPASS 2 SE

4.0.007.0124 – TORNEIRA MEIA VOLTA ECC-23 RST

TAP ECC-23

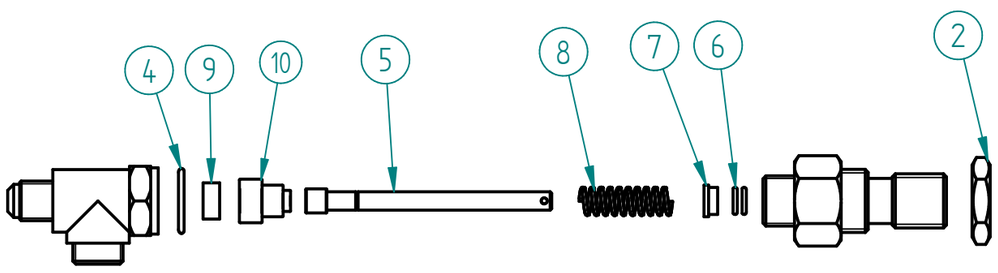

ITEM Nº	CODIGO	DESIGNAÇÃO	DESIGNATION	QUANT.
2	4.0.155.0015	PORCA G1/2 LATAO	BRASS NUT G1/2	1
4	5.0.016.0303	JUNTA COBRE 22X17X2MM TORN. ECC-07	TAP GASKET	1
5	5.0.007.0338	VEIO TORNEIRA MEIA VOLTA ECC-23 RST	TAP ECC-23 SHAFT	1
6	5.0.016.0306	ORING VEIO TORN. ECC-07	TAP SHAFT ORING	2
7	5.0.016.0305	CASQUILHO VEIO TORN. ECC-07	METAL SLEEVE	1
8	5.0.016.0302	MOLA VEIO TORN. ECC-07	TAP SHAFT SPRING	1
9	5.0.016.0301	VEDANTE BORRACHA TORN. ECC-07	TAP ECC-07 GASKET	1
10	5.0.007.0339	EXTENSÃO VEIO TORNEIRA MEIA VOLTA ECC-23 RST	TAP ECC-23 SHAFT EXTENSION	1

ACESSÓRIOS TUBOS TORNEIRA VAPOR

STEAM TAP TUBE ASS.

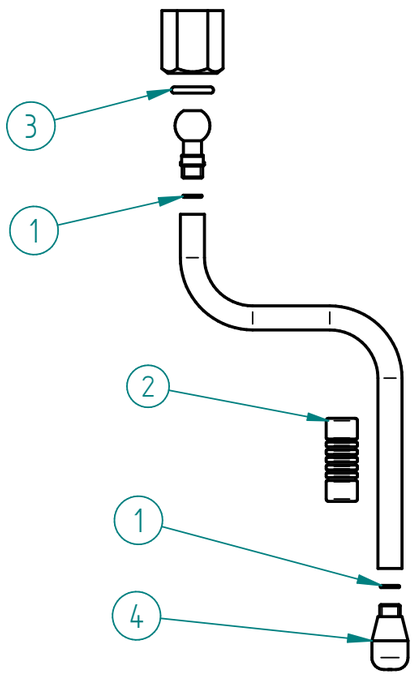

ITEM Nº	CODIGO	DESIGNAÇÃO	DESIGNATION	QUANT.
1	5.0.016.0323	ORING 6X1 TUBO VAPOR ATLANTIC	ORING 6X1	2
2	4.0.000.0814	PINÇA ISOLANTE TUBO VAPOR 10MM	INSULATING HANDGRIP 10MM	1
3	5.0.025.0205	ORING 12,1x2,7 PORCA TUBO TORN.	ORING 12,1x2,7	1
4	5.0.028.0328	ESPALHADOR VAPOR TORN. PACIFIC M8,5X0,75 – 3 FUROS	SPRAYER OF THE STEAM TAP – 3 HOLES	1

5.0.016.0330 – TUBO TORNEIRA AGUA ATLANTIC (CONJ.)

WATER TAP TUBE ASS.

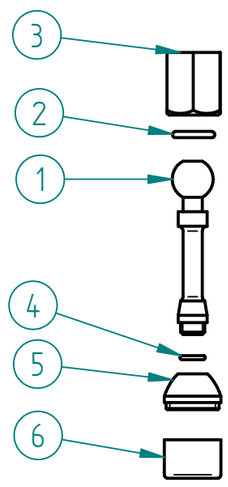

ITEM Nº	CODIGO	DESIGNAÇÃO	DESIGNATION	QUANT.
1	5.0.016.0331	TUBO TORNEIRA AGUA CROM. ATLANTIC	WATER TAP TUBE	1
2	5.0.025.0205	ORING 12,1x2,7 PORCA TUBO TORN.	ORING 12,1x2,7	1
3	5.0.016.0321	PORCA TUBO TORN. ATLANTIC	TAP TUBE NUT	1
4	5.0.000.0565	ORING 7,2X1,9 VEIO TORN. BR-03	TAP SHAFT ORING	1
5	5.0.000.0640	PONTEIRA TUBO ÁGUA	POINT OF THE WATER TUBE	1
6	5.0.000.0148	ESPALHADOR PONTEIRA ÁGUA	SPRAYER OF THE WATER POINT	1

5.0.007.0010 – TORNEIRA ALAVANCA G1/4-G3/8 RST

LEVER TAP G1/4-G3/8 RST

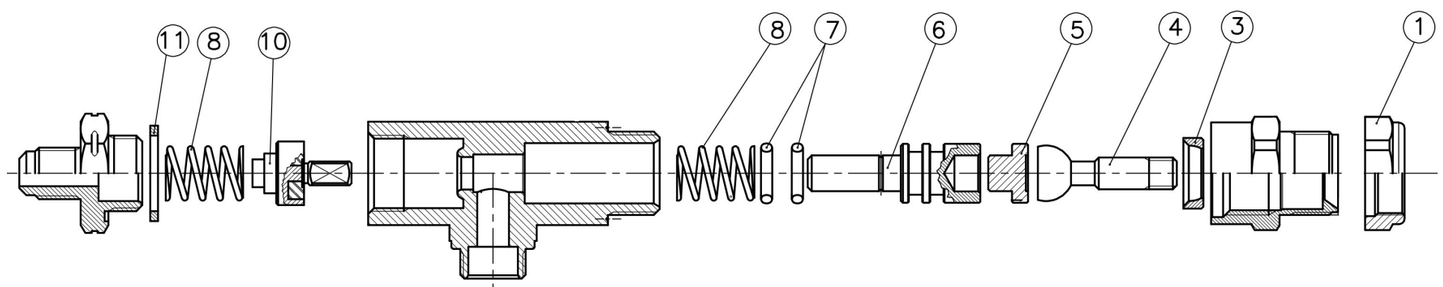

ITEM	CÓDIGO	DESIGNAÇÃO	DESIGNATION	QUANT.
1	5.0.007.0311	PORCA M21X1 CROM. TORN. ALAVANCA	NUT M21X1 CROM. LEVER TAP	1
3	5.0.007.0309	INSERTO AÇO NITRO. TORN ALAVANCA	STEEL INSERT LEVER TAP	1
4	5.0.007.0308	VEIO FRONTAL AÇO NITRO. C/ ESFERA TORN. ALAVANCA	FRONT SHAFT LEVER TAP	1
5	5.0.007.0307	CASQUILHO AÇO NITRO. TORN. ALAVANCA	METAL SLEEVE LEVER TAP	1
6	5.0.007.0305	VEIO POSTERIOR PORTA ORINGS TORN. ALAVANCA	REAR SHAFT LEVER TAP	1
7	5.0.007.0306	ORING VEIO POST. TORN. ALAVANCA	REAR SHAFT ORING LEVER TAP	2
8	5.0.007.0304	MOLA VEIO TORN. ALAVANCA	SHAFT SPRING LEVER TAP	2
10	5.0.007.0301	VALVULA ANTI-RETORNO TORN. ALAVANCA	ANTI-BACKFLOW VALVE LEVER TAP	1
11	5.0.007.0302	JUNTA TEFLON 24X19X2 TORN. ALAVANCA	TEFLON GASKET 24X19X2MM LEVER TAP	1

restoranu

MÁQ. CAFÉ COMPASS 2 SE

ESPRESSO COFFEE MACHINE COMPASS 2 SE

16 - GRUPO ECC-07 C/ ACESSORIOS

16 - ECC-07 GROUP W/ ACESS.

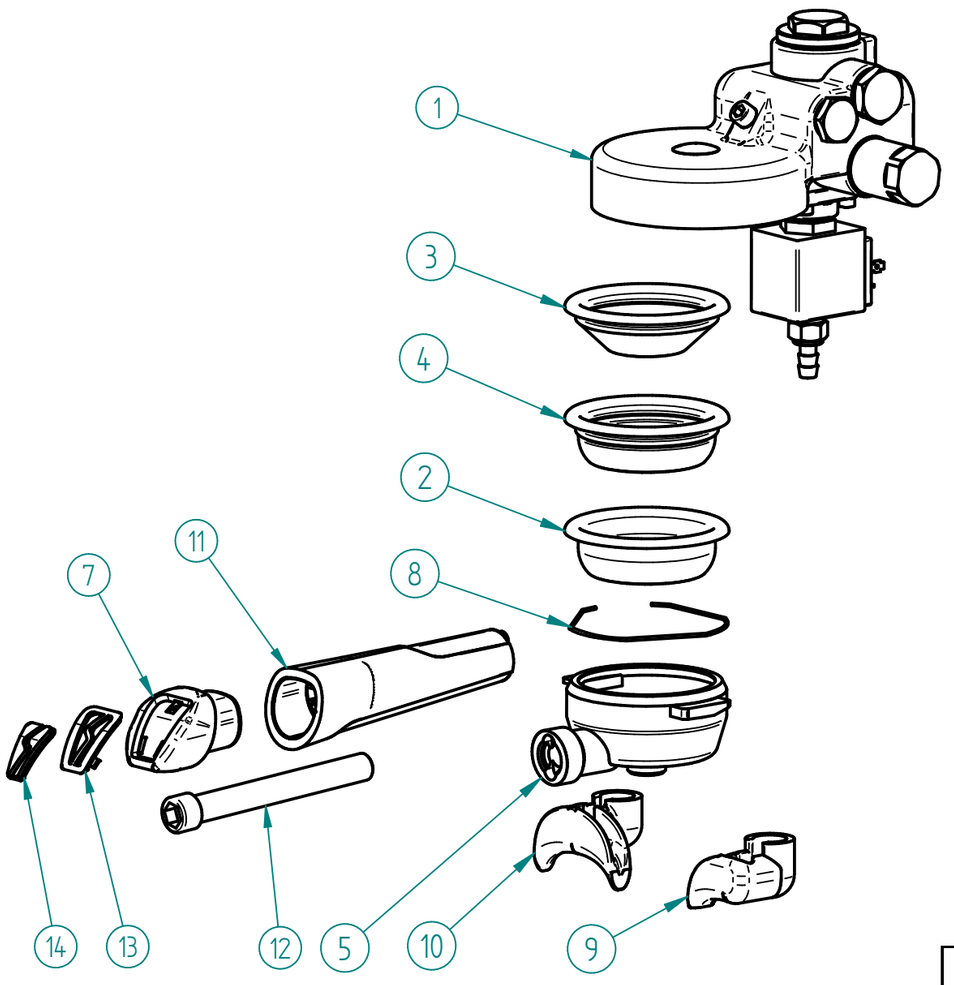

ITEM Nº	CÓDIGO	DESIGNAÇÃO	DESIGNATION	QUANT.
1	7.0.016.0080	GRUPO ECC-07 CONJ.	ECC-07 GROUP ASS.	1
2	5.0.000.0167	FILTRO CEGO	BLIND FILTER	1
3	5.0.000.0162	FILTRO 1 BICA 6GR NV	6GR 1 CUP FILTER	1
4	5.0.000.0173	FILTRO 2 BICAS 12 GR	2 COFFEES FILTER 12 GR	1
5	5.0.000.0653-A	PORTA FILTRO M12 INCLIN. - REFORÇADO	FILTER HOLDER	1
7	4.0.007.0163	TAMPAO CROMADO PUNHO PORTA FILTRO RST NV	CHROME FILTER HOLDER HANDLE RST	1
8	5.0.000.0411	MOLA PORTA FILTRO 1,2MM	FILTER HOLDER SPRING	1
9	5.0.000.0111	DISTRIBUIDOR 1 BICA EM L	L SPOUT SPECIAL	1
10	5.0.000.0106	DISTRIBUIDOR 2 BICAS	2 COFFEES OUTLET	1
11	4.0.007.0160-A	PUNHO PORTA FILTRO RST NV	FILTER HOLDER HANDLE RST NV	1
12	4.0.007.0149	PARAFUSO UMBR. M12X100 ZINC. DIN912	CYLIND. HEAD SCREW W/ HEX. SOCKET M12X100 ZINC. DIN912	1
13	4.0.007.0166	INSERTO TAMPAO PUNHO PORTA FILTRO RST NV	INSERT FILTER HOLDER HANDLE RST	1
14	4.0.007.0170	SIMBOLO FIAMMA BRANCO PUNHO PORTA FILTRO RST NV	WHITE SYMBOL FIAMMA FILTER HOLDER HANDLE RST	1

CÓDIGO	DESIGNAÇÃO	DESIGNATION
5.0.000.0621-A	PORTA FILTRO REFORÇADO CONJ. RST BRANCO - 1 BICA	FILTER HOLD. REINF. ASSEMB. RST WHITE - 1 COFFEE CUP
5.0.000.0624	PORTA FILTRO REFORÇADO CONJ. RST BRANCO - 2 BICAS	FILTER HOLD. REINF. ASSEMB. RST WHITE - 2 COFFEE CUP

1 - 7.0.016.0080 - GRUPO ECC-07 CONJ.

1 - GROUP ECC-07 ASS.

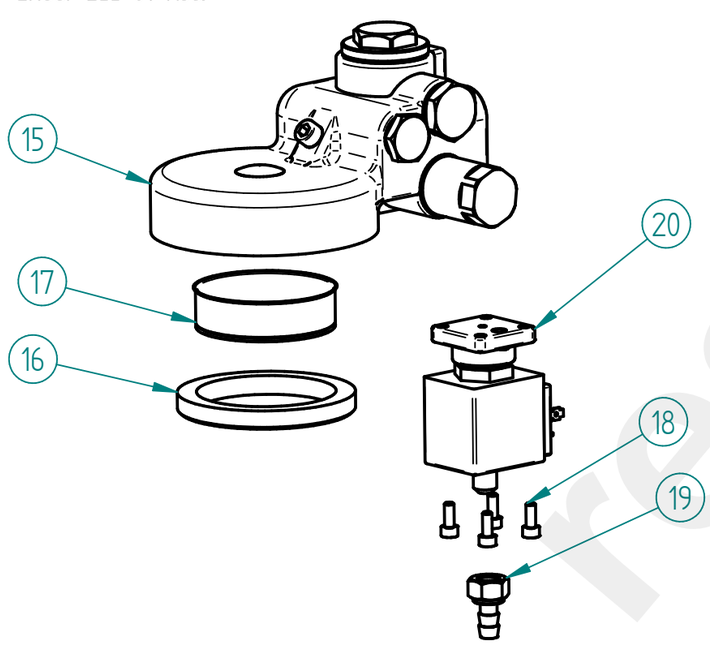

ITEM Nº	CÓDIGO	DESIGNAÇÃO	DESIGNATION	QUANT.
15	4.0.016.0000	GRUPO ECC-07	GROUP ECC-07	1
16	5.0.025.0012	JUNTA PORTA FILTRO 58X74X8,5MM (GR B-61/ECC-07)	FILTER HOLDER GASKET	1
17	5.0.025.0010	CRIVO GRUPO B-61/ECC-07	GROUP B-61 SIEVE	1
18	5.0.000.0575	PARAF. UMBRACO M4X10 INOX DIN912	M4X10 INOX DIN912 UMBRACO SCREW	4
19	4.0.000.0198	RACORD DESCARGA ELECTROVALVULA	ELECTROVALVE DRAINAGE RACCORD	1
20	5.0.000.1123	ELECTROVALVULA 3 VIAS 230V - BASE LATAO	ELECTROVALVE 3 WAYS 230V - BRASS BASE	1

1 - 7.0.016.0082 - GRUPO ECC-07 CONJ. 208-240V-60HZ

1 - GROUP ECC-07 ASS. 208-240V-60HZ

ITEM Nº	CÓDIGO	DESIGNAÇÃO	DESIGNATION	QUANT.
20	5.0.000.0143	ELECTROVALVULA 3 VIAS 208-240V/60Hz (PARKER) - GRUPO	208-240V/60Hz 3 WAY ELECTROVALVE GROUP	1

15 - 4.0.016.0000 - GRUPO ECC-07

15 - GROUP ECC-07

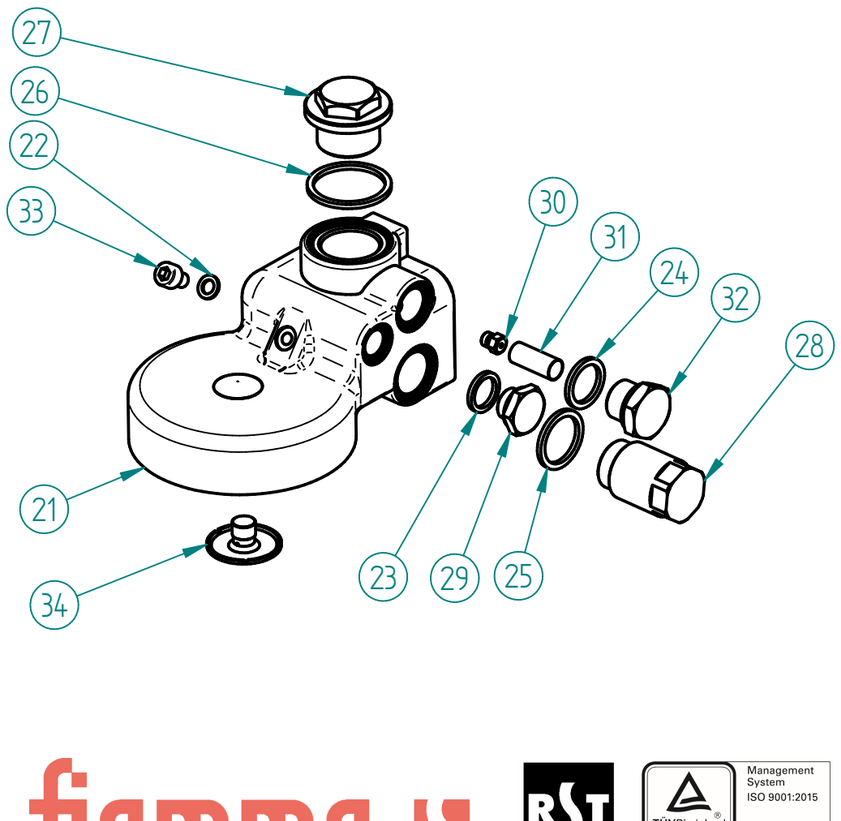

ITEM Nº	CODIGO	DESIGNAÇÃO	DESIGNATION	QUANT.
21	5.0.016.0100	CORPO GRUPO ECC-07	BODY OF THE GROUP ECC-07	1
22	5.0.025.0015	JUNTA TEFLON 10X6X1	TEFLON GASKET	1
23	5.0.000.0315	JUNTA TEFLON 18X13,5X2MM	TEFLON GASKET	1
24	5.0.025.0022	JUNTA TEFLON 22X17X2	TEFLON GASKET	1
25	5.0.016.0106	JUNTA TEFLON 26X 21X2	TEFLON GASKET	1
26	5.0.025.0002	JUNTA TEFLON 35X30X2	TEFLON GASKET	1
27	5.0.016.0102	TAMPAO SUPERIOR M26X1,5 CROM. GR ECC-07	UPPER CHROM. COVER M26X1,5 (GR ECC-07)	1
28	5.0.016.0105	INFUSOR GRUPO ECC-07	INFUSER OF GROUP ECC-07	1
29	5.0.016.0104	TAMPAO LATERAL G1/4 CROM. GR ECC-07	CHROM. SIDE COVER G1/4 (GR ECC-07)	1
30	5.0.016.0110	INJECTOR 0.7 M6X0,75 (GR ECC-07)	INJECTOR 0,7 M6X0,75 (GR ECC-07)	1
31	5.0.025.0023	FITRO INOX INJECTOR	GROUP GIGLEUR FILTER	1
32	5.0.025.0021	TAMPAO G3/8 CROM. (GR B-61/GR EC-07)	CHROM. COVER G3/8 (GR B-61/GR ECC-07)	1
33	5.0.025.0003	PARAFUSO UMBRACO M6X10 INOX (GR B-61/ECC-07)	FRONT INOX SCREW M6X10 OF THE GROUP B-61	1
34	5.0.025.0009	DISTRIBUIDOR GRUPO B-61/ECC-07	OUTLET GROUP B-61/ECC-07	1

fiamma
RST
TÜVRheinland CERTIFIED Management System ISO 9001:2015 www.tuv.com ID 9108624282

www.fiamma.pt

This drawing may be altered without previous notice.
Os elementos deste desenho podem ser alterados sem aviso prévio.

MB „Restoranų įranga“ · Vito Gerulaičio 1-59, LT-08200 Vilnius · +370 614 89888 · info@restoranu.eu · www.restoranu.eu

MÁQ. CAFÉ COMPASS 2 SE

ESPRESSO COFFEE MACHINE COMPASS 2 SE

MÁQUINAS GRUPOS ALTOS / TALL CUPS MACHINES

17 - PAINEL FRONTAL CONJ. COMPASS 2 SE TC

17 - FRONT PANEL COMPASS 2 SE TC

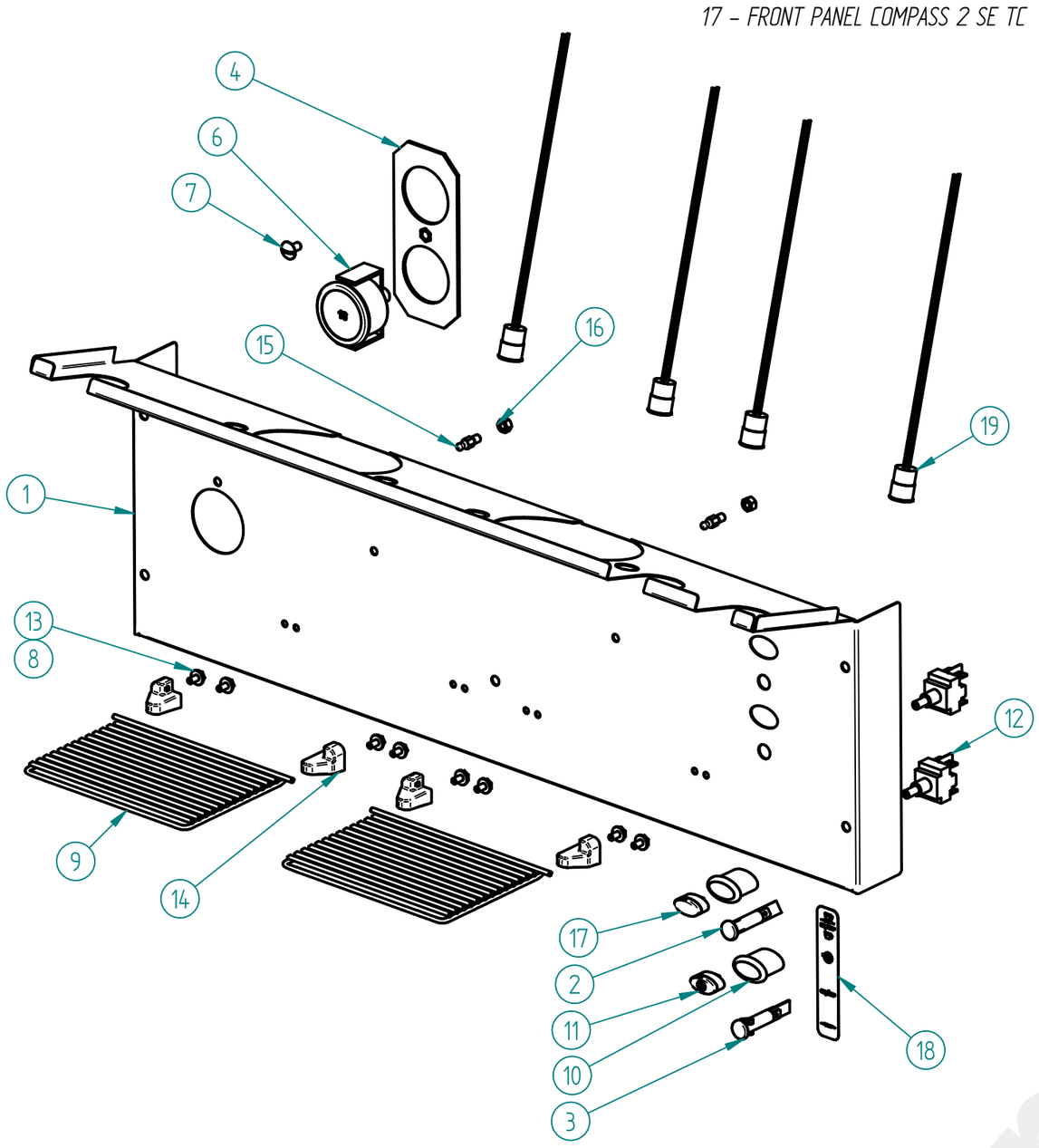

ITEM Nº	CÓDIGO	DESIGNAÇÃO	DESIGNATION	QUANT.
1	7.0.507.0274	PAINEL FRONTAL GRELHA ARAME COMPASS 2 SE TC NV	FRONT PANEL COMPASS 2 SE TC	1
2	4.0.025.0130	SINALIZADOR VERDE Φ10MM TERM. MACHO	GREEN LED Φ10MM	1
3	4.0.025.0135	SINALIZADOR LARANJA Φ10MM TERM. MACHO	ORANGE LED Φ10MM	1
4	7.0.016.0204	SUPORTE MANÓMETROS ATLANTIC	ATLANTIC GAUGE SUPPORT	1
6	5.0.000.0391-A	MANOMETRO 0-16BAR	PRESSURE GAUGE 0-16BAR	1
7	4.2.000.9115	PARAFUSO CAB. OVAL LARGA M5X10 INOX	SCREW M5X10	1
8	4.0.016.7018-A	SUPORTE ESQUERDO GRELHA CHAVENAS ARAME	WIRE CUP LEFT SUPPORT	2
9	4.0.016.7015-A	GRELHA CHAVENAS ARAME CARAVEL/COMPASS/QUADRANT	WIRE COFFEE TRAY GRID	2
10	4.0.000.0503	CAIXA ELIPSE D16	BOX D16 ELIPSE	2
11	4.0.000.0526	TASTO ELIPSE D16 ON/OFF	SWITCH KEY D16 ON/OFF	1
12	4.0.000.0513	INTERRUPTOR BIPOLAR E0070	TWO POLES SWITCH E0070	2
13	4.2.000.9126	PARAFUSO ROSCA PLASTICO K40X8 ZINC.	SCREW K40X8	8
14	4.0.016.7017-A	SUPORTE DIREITO GRELHA CHAVENAS ARAME	WIRE CUP RIGHT SUPPORT	2
15	4.0.016.7020	FIXADOR GRELHA CHAVENAS ARAME	FIXER PIN	2
16	4.2.000.9172	PORCA M5 ZINC. DIN934	M5 NUT ZINC. DIN934	2
17	4.0.000.0507	TASTO ELIPSE D16	SWITCH KEY D16	1
18	4.0.007.0064	AUTOCOLANTE INTERRUPTOR GERAL COMPASS	MAIN SWITCH SELF-STICKING PLATE COMPASS	1
19	4.0.007.0041-A	LED BRANCO ROSCADO Φ13MM 12V C/ CABO	FITTING WHITE LED Φ13MM 12V W/ CABLE	4

MÁQUINAS GRUPOS BAIXOS / LOW CUPS MACHINES

17 - PAINEL FRONTAL CONJ. COMPASS 2 SE

17 - FRONT PANEL COMPASS 2 SE

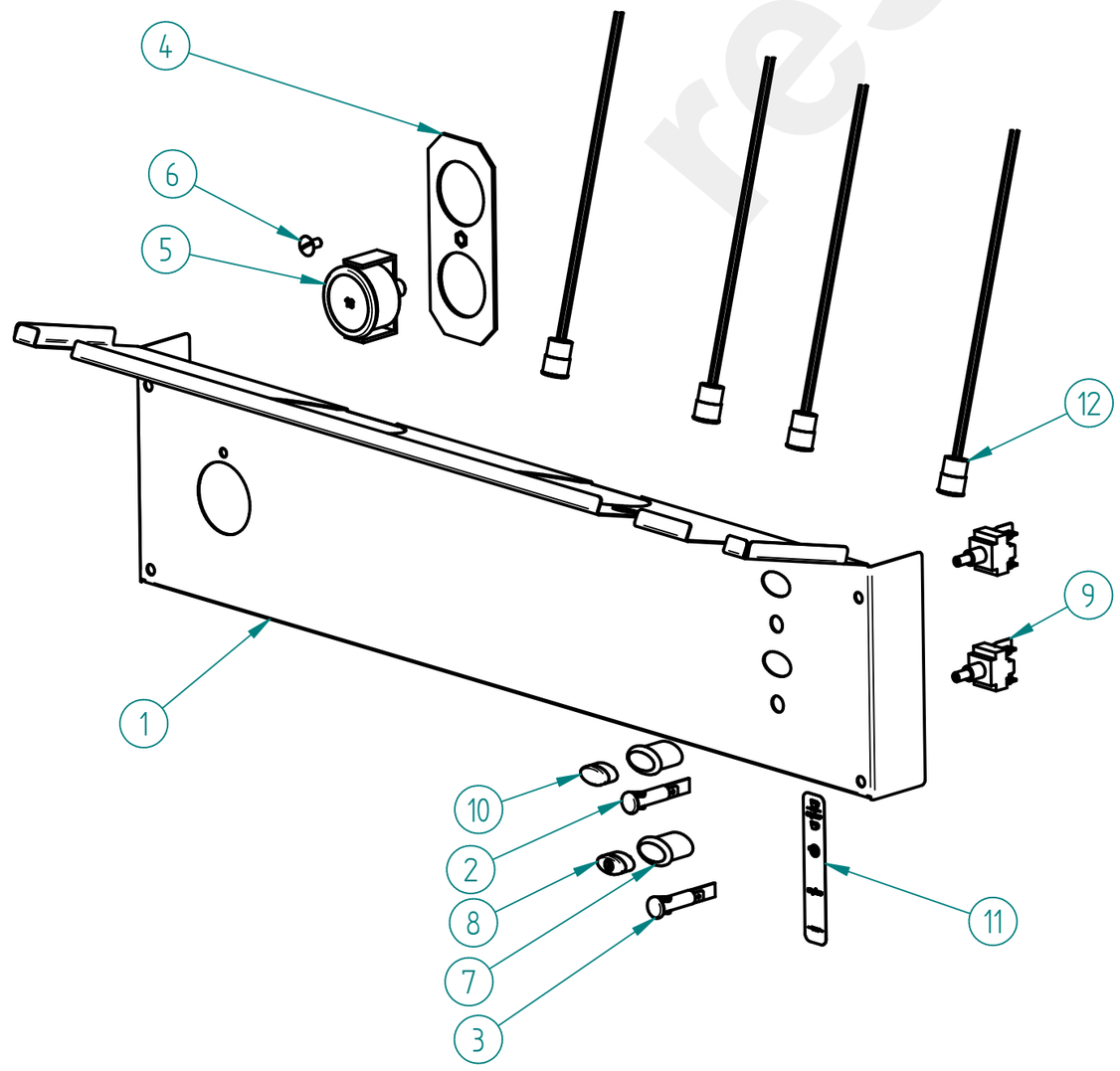

ITEM Nº	CÓDIGO	DESIGNAÇÃO	DESIGNATION	QUANT.
1	7.0.507.0074	PAINEL FRONTAL COMPASS 2 SE NV	FRONT PANEL COMPASS 2 SE	1
2	4.0.025.0130	SINALIZADOR VERDE Φ10MM TERM. MACHO	GREEN LED Φ10MM	1
3	4.0.025.0135	SINALIZADOR LARANJA Φ10MM TERM. MACHO	ORANGE LED Φ10MM	1
4	7.0.016.0204	SUPORTE MANÓMETROS ATLANTIC	ATLANTIC GAUGE SUPPORT	1
5	5.0.000.0391-A	MANOMETRO 0-16BAR	PRESSURE GAUGE 0-16BAR	1
6	4.2.000.9116	PARAFUSO CAB. OVAL LARGA M5X10 NIQ	SCREW M5X10	1
7	4.0.000.0503	CAIXA ELIPSE D16	BOX D16 ELIPSE	2
8	4.0.000.0526	TASTO ELIPSE D16 ON/OFF	SWITCH KEY D16 ON/OFF	1
9	4.0.000.0513	INTERRUPTOR BIPOLAR E0070	TWO POLES SWITCH E0070	2
10	4.0.000.0507	TASTO ELIPSE D16	SWITCH KEY D16	1
11	4.0.007.0064	AUTOCOLANTE INTERRUPTOR GERAL COMPASS	MAIN SWITCH SELF-STICKING PLATE COMPASS	1
12	4.0.007.0041-A	LED BRANCO ROSCADO Φ13MM 12V C/ CABO	FITTING WHITE LED Φ13MM 12V W/ CABLE	4

Management System ISO 9001:2015
TÜVRheinland CERTIFIED
www.tuv.com ID 9108624282

www.fiamma.pt

This drawing may be altered without previous notice.
Os elementos deste desenho podem ser alterados sem aviso prévio.

MÁQ. CAFÉ COMPASS 2 SE

ESPRESSO COFFEE MACHINE COMPASS 2 SE

24 – CONTADOR VOLUMETRICO CONJ. MÁQ. CAFÉ 2GR/3GR

24 – ASS. VOLUMETRIC DOSER COFFEE MACHINES 2GR/3GR

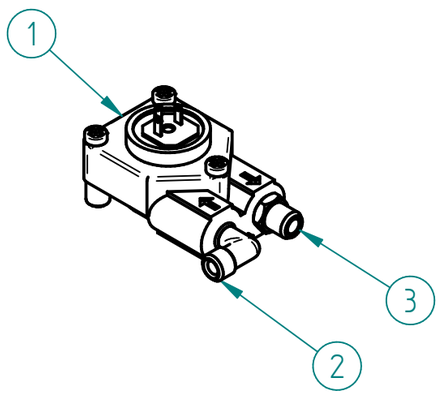

ITEM Nº	CÓDIGO	DESIGNAÇÃO	DESIGNATION	QUANT.
1	5.0.000.1012	CONTADOR VOLUMETRICO D1,15-G1/8 C/ LED	VOLUMETRIC DOSER D1,15-G1/8 W/ LED	1
2	5.0.000.0730	RACORD L G1/8-G1/8	RACORD L G1/8-G1/8	1
3	5.0.000.0725	RACORD G1/8-G1/8 NIQ.	RACORD G1/8-G1/8 NIQ.	1

26 – 7.0.016.0065 – BLOCO ENTRADA AGUA ECC-07 (AUT.) CONJ.

26- WATER INLET ASS.

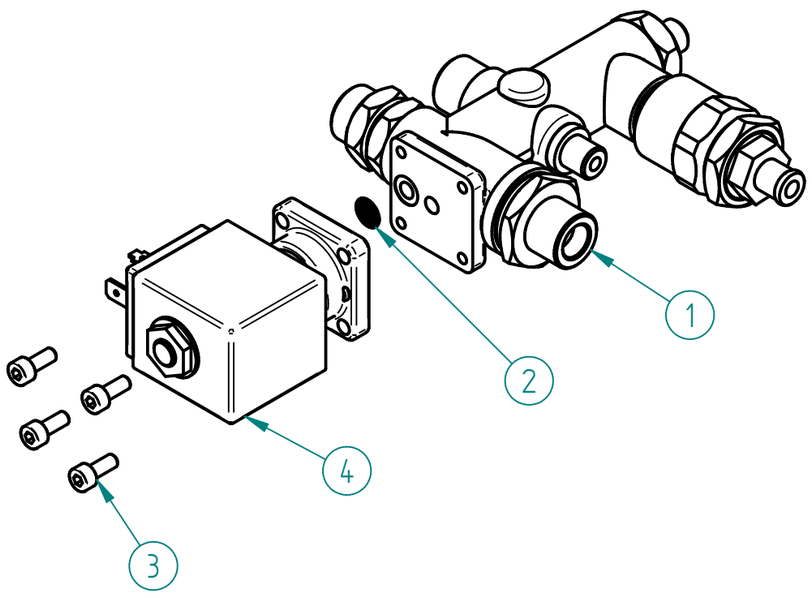

ITEM Nº	CÓDIGO	DESIGNAÇÃO	DESIGNATION	QUANT.
1	4.0.016.0010	BLOCO ENTRADA AGUA ECC-07 (AUT.)	WATER INLET ASS.	1
2	5.0.000.0181	FILTRO BASE ELECTROVAL. Φ9MM	ELECTROVAL. FILTER Φ9MM	1
3	5.0.000.0575	PARAF. UMBRACO M4X10 INOX DIN912	M4X10 INOX DIN912 UMBRACO SCREW	4
4	5.0.000.1124	ELECTROVALVULA 2 VIAS 230V – BASE LATAO	ELECTROVALVE 2 WAYS 230V – BRASS BASE	1

26 – 7.0.016.0067 – BLOCO ENTRADA AGUA ECC-07 (AUT.) CONJ. 208-240V/60HZ

26- WATER INLET ASS. 208-240V/60HZ

ITEM Nº	CÓDIGO	DESIGNAÇÃO	DESIGNATION	QUANT.
4*	5.0.000.0124	ELECTROVAL. 2 VIAS 110V/60HZ-ENT. AGUA PARAL.	2 WAY SOL.VALVE 110V/60HZ – PARAL. WATER INLET	1

1 – 4.0.016.0010 – BLOCO ENTRADA AGUA ECC-07 (AUT.)

1 – WATER INLET

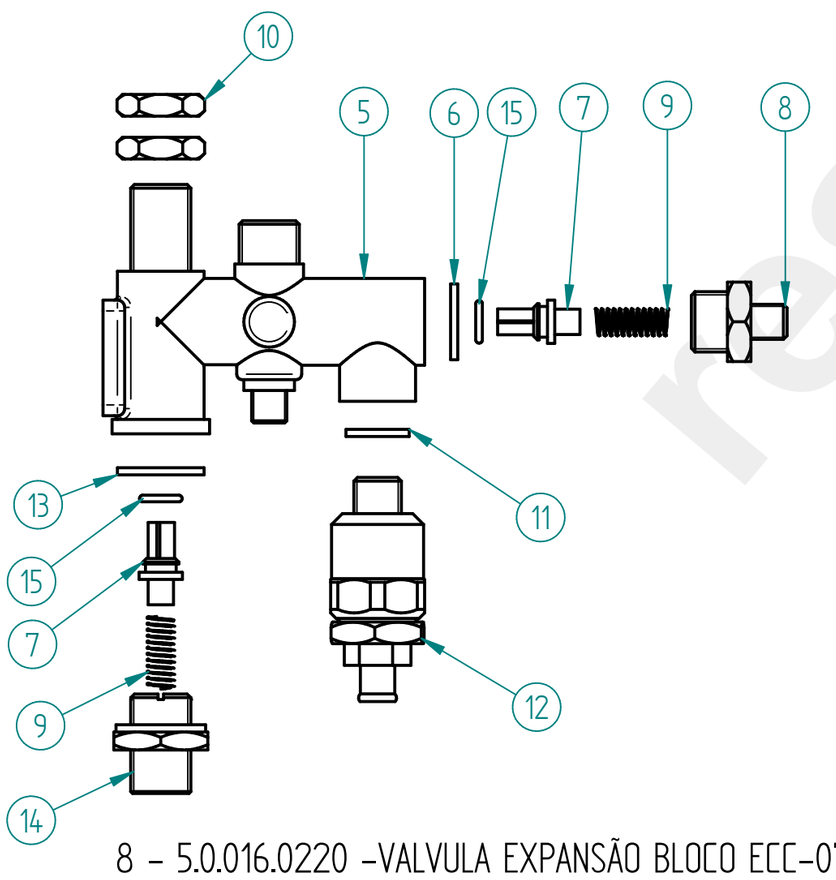

ITEM Nº	CODIGO	DESIGNAÇÃO	DESIGNATION	QUANT.
5	5.0.016.0200	CORPO BLOCO AUT. ECC-07	DISTRIBUTION GROUP BODY (AUT. ECC-07)	1
6	5.0.025.1386	JUNTA TEFLON 21X16,8X2	TEFLON GASKET	1
7	5.0.016.0231	VALVULA ANTI-RETORNO BLOCO ECC-07	ANTI-BACKFLOW VALVE	2
8	5.0.016.0235	RACORD G3/8 x G1/8 BLOCO ECC-07	RACORD G3/8XG1/8 (DISTRIB. GROUP ECC-07)	1
9	5.0.016.0234	MOLA VALVULA ANTI-RETORNO BLOCO ECC-07	ANTI-BACKFLOW VALVE SPRING	2
10	4.0.000.0045	PORCA G3/8 LATAO (SEXT. 21MM)	BRASS NUT G3/8 (21MM)	2
11	5.0.000.0315	JUNTA TEFLON 18X13,5X2MM	TEFLON GASKET	1
12	5.0.016.0220	VALVULA EXPANSAO BLOCO ECC-07	EXPANSION VALVE (DISTRIB. GROUP ECC-07)	1
13	5.0.016.0211	JUNTA TEFLON 24X19X2	TEFLON GASKET	1
14	5.0.016.0215	RACORD M20x1,5-G3/8 BLOCO ECC-07	RACORD M20X1,5-G3/8	1
15	5.0.000.0506	ORING 8X1,9MM VITON	O-RING 8X1,9 VITON	2

8 – 5.0.016.0220 –VALVULA EXPANSÃO BLOCO ECC-07

8 – EXPANSION VALVE (DISTIB. GROUP ECC-07)

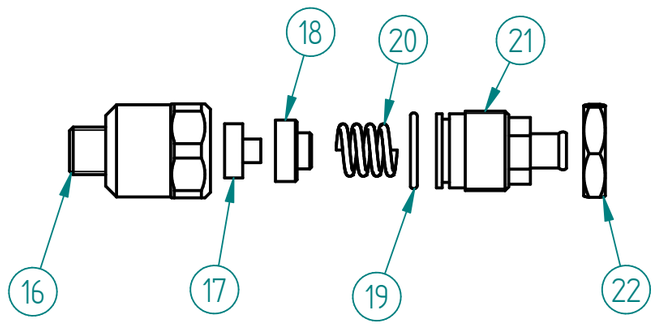

ITEM Nº	CODIGO	DESIGNAÇÃO	DESIGNATION	QUANT.
16	5.0.016.0222	CORPO VALVULA EXPAN. BLOCO ECC-07	EXPANSION VALVE BODY	1
17	5.0.016.0223	JUNTA VALVULA EXPAN. BLOCO ECC-07	EXPANSION VALVE GASKET	1
18	5.0.016.0224	SUPORTE JUNTA BLOCO ECC-07	GASKET HOLDER (DISTRIB. GROUP ECC-07)	1
19	5.0.016.0225	ORING 21X17X2	ORING 21X17X2	1
20	5.0.016.0214	MOLA 8-16KG BLOCO ECC-07	SPRING	1
21	5.0.016.0226	RACORD M22X1 VALVULA EXPAN. BLOCO ECC-07	RACORD M22X1- EXPANSION VALV.	1
22	5.0.016.0227	PORCA M22X1 LATAO	BRASS NUT M22X1	1

restoranu.eu

MÁQ. CAFÉ COMPASS 2 SE

ESPRESSO COFFEE MACHINE COMPASS 2 SE

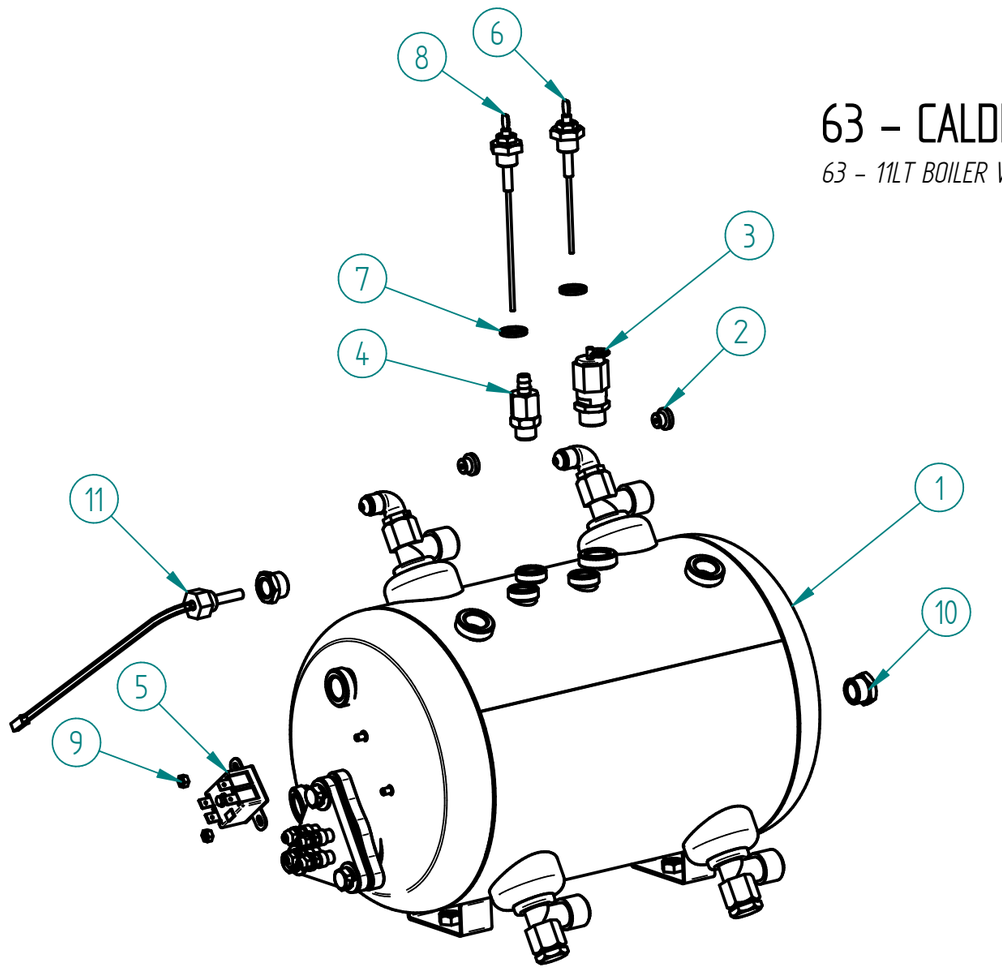

63 – CALDEIRA 11LT C/ ACESSORIOS

63 – 11LT BOILER W/ ACESS

ITEM Nº	CÓDIGO	DESIGNAÇÃO	DESIGNATION	QUANT.
1	7.0.000.0593-A	CALDEIRA 2GR 11LT C/ ACESS. INJECTOR SUPERIOR	2 GROUP 11LT BOILER W/ ACESS.	1
2	5.0.000.0748	REDUTOR CAUDAL 2,5MM	FLOW REDUCER 2,5MM	2
3	4.0.000.0058	VALVULA SEGURANÇA CALDEIRA G3/8 1,8BAR	BOILER SECURITY VALVE G3/8 1,8BAR	1
4	5.0.000.1002	VALVULA ANTI-VACUO	ANTI VACUUM VALVE	1
5	4.0.000.0250	TERMOSTATO SEGURANÇA 130º	SAFETY THERMOSTAT 130º	1
6	7.0.016.0070	SONDA ø2,5X105MM CONJ.	ø2,5X105MM PROBE ASS.	1
7	5.0.000.0315	JUNTA TEFLON 18X13,5X2MM	TEFLON GASKET	2
8	7.0.025.0002	SONDA ø2,5X135MM CONJ.	ø2,5X135MM PROBE ASS.	1
9	4.2.000.9184	PORCA M4 LATAO DIN934	BRASS M4 NUT DIN934	2
10	4.0.000.0118	RACORD G3/8-G1/4F NIQ.	G3/8-G1/4F NICKEL RACORD	2
11	4.0.000.0941	SONDA TEMPERATURA G1/4-280MM	TEMPERATURE PROBE G1/4-280MM	1

1 – 7.0.000.0593-A – CALDEIRA 2GR 11LT C/ ACESS. INJECT. SUP.

1 – 2 GROUP 11LT BOILER W/ ACESS. UPPER INJ.

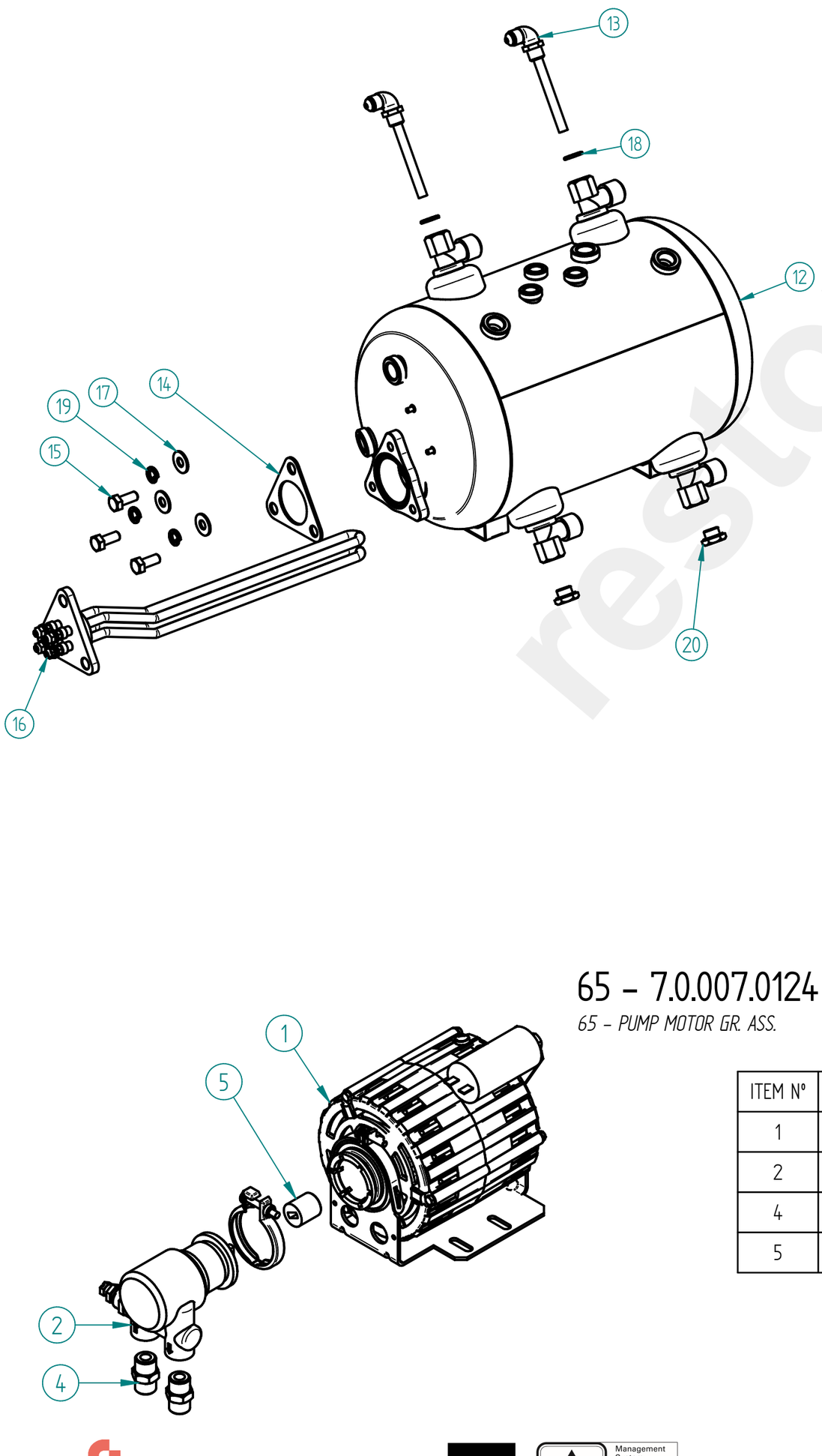

ITEM Nº	CÓDIGO	DESIGNAÇÃO	DESIGNATION	QUANT.
12	7.0.000.0547	CALDEIRA 2GR 11LT (RACORD SOLD.)	2 GROUP 11LT BOILER	1
13	4.2.000.0121	RACORD INJECTOR SUPERIOR C/ TUBO NV	INJECTION RACORD W/ TUBE NV	2
14	7.0.000.0010	JUNTA DA RESISTENCIA TRIANGULAR	HEATING ELEMENT GASKET	1
15	4.2.000.9674	PARAFUSO CAB. SEXT. M8X20 INOX DIN933	SS HEX. HEAD SCREW M8X20 DIN933	3
16	5.0.000.0802	RESISTENCIA FLANGE TRIANG. 3500W 2GR	TRIANGULAR HEATING ELEMENT (3500 W)	1
17	4.2.000.9165	ANILHA PLANA M8X20X1,5 ZINC. DIN9021	FLAT RING M8X20X1,5 DIN9021	3
18	4.0.000.0013	ANILHA 13x17MM (G1/4) COBRE	GASKET G1/4 CU	2
19	4.2.000.9147	ANILHA MOLA M8 ZINC. DIN127B	M8 SPRING WASHER	3
20	4.0.000.0151	TAMPAO G1/4 LATAO	BRASS COVER G1/4	2

1 – 7.0.000.0622 – CALDEIRA 2GR 11LT C/ ACESS. INJECT. SUP. 110V

1 – 2 GROUP 11LT BOILER W/ ACESS. UPPER INJ. 110V

ITEM Nº	CÓDIGO	DESIGNAÇÃO	DESIGNATION	QUANT.
16	5.0.000.0803	RESISTENCIA FLANGETRIANGULAR 2500W 2 GR 127V	TRIANGULAR HEATING ELEMENT (2500 W) 2GR 127V	1

1 – 7.0.000.0623 – CALDEIRA 2GR 11LT C/ ACESS. INJECT. SUP. 3000W

1 – 2 GROUP 11LT BOILER W/ ACESS. UPPER INJ. 3000W

ITEM Nº	CÓDIGO	DESIGNAÇÃO	DESIGNATION	QUANT.
16	4.0.000.0221	RESISTENCIA FLANGE TRIANG. 3000W	TRIANGULAR HEATING ELEMENT (3000 W)	1

1 – 7.0.000.0624 – CALDEIRA 2GR 11LT C/ ACESS. INJECT. SUP. 4500W

1 – 2 GROUP 11LT BOILER W/ ACESS. UPPER INJ. 4500W

ITEM Nº	CÓDIGO	DESIGNAÇÃO	DESIGNATION	QUANT.
16	5.0.000.4580	RESISTENCIA FLANGE TRIANG. 4500W 2GR	TRIANGULAR HEATING ELEMENT (4500 W)	1

65 – 7.0.007.0124 – MOTOR GR. BOMBA CONJ.

65 – PUMP MOTOR GR. ASS.

ITEM Nº	CÓDIGO	DESIGNAÇÃO	DESIGNATION	QUANT.
1	5.0.000.0485	MOTOR GR. P/ ACOPLAMENTO	MOTOR TO COUPLING	1
2	5.0.000.0040	BOMBA AGUA	WATER PUMP	1
4	4.0.000.0115	RACORD G3/8-G3/8 (BOMBA)	PUMP'S METAL SLEEVE	2
5	5.0.000.0474	ACOPLAMENTO MOTOR/BOMBA	MOTOR/PUMP COUPLING	1

restoran.eu

MÁQ. CAFÉ COMPASS 2 SE

ESPRESSO COFFEE MACHINE COMPASS 2 SE

68 – 7.0.507.0101 – CABO H07RN-F 3G2,5-1,8MT CONJ. COMPASS 2 SE

68 – CABLE H07RN-F 3G2,5-1,8MT ASSEMB. COMPASS 2 SE

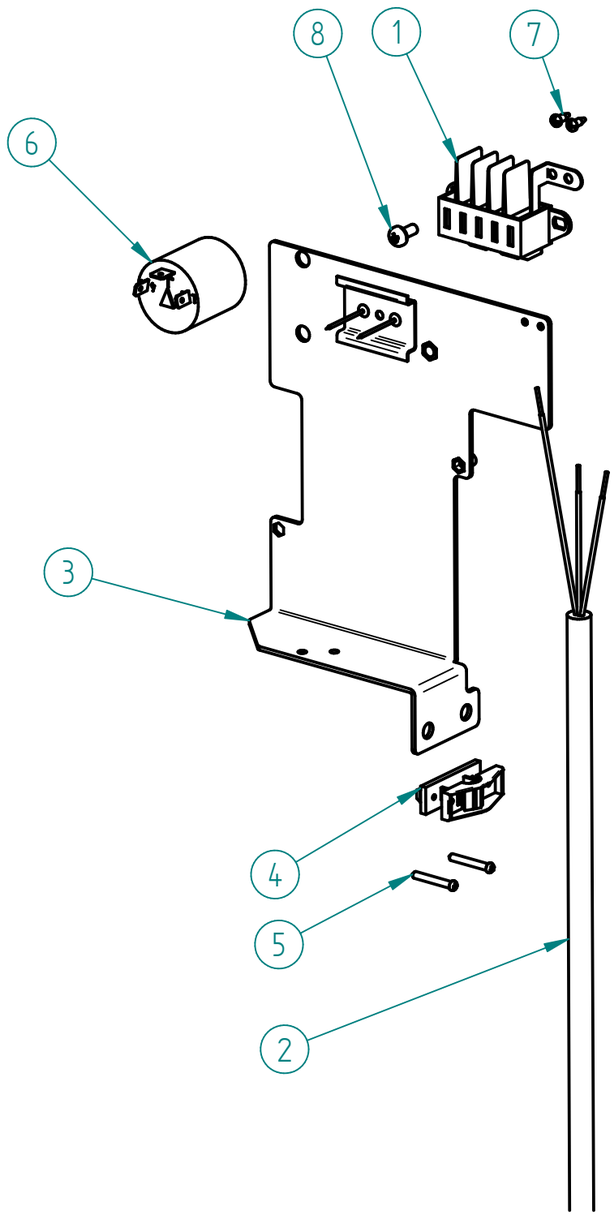

ITEM Nº	CÓDIGO	DESIGNAÇÃO	DESIGNATION	QUANT.
1	4.0.028.0015	LIGADOR RAPIDO 5 POLOS	FAST LINKER	1
2	4.0.033.0100	CABO H07 RN-F 3G2,5-1,8MT	CABLE H07RN-F 3G2,5-1,8MT	1
3	7.0.507.0028	SUPORTE CERRA CABOS/UNIDADE ELECT. COMPASS 2/3 SE	QUADRANT CONNECTOR SUPPORT	1
4	4.0.000.0496	CERRA CABOS PA 268	CABLE FASTENER PA 268	1
5	4.2.000.9129	PARAFUSO ROSCA PLASTICO KB3,5X25 ZINC.	SCREW KB3,5X25	2
6	4.0.000.0997	FILTRO EMC MAQ. CAFE	EMC FILTER COFFEE MACHINE	1
7	4.2.000.9103	PARAFUSO ROSCA CHAPA B3,5X9,5 NIQ. DIN7981	SCREW B3,5X9,5	2
8	4.2.000.9121	PARAFUSO CAB. PH M5X12 ZINC. DIN7985	M5X12 ZINC. PH HEAD SREW DIN 7985	1

ITEM Nº	CÓDIGO	DESIGNAÇÃO	DESIGNATION	QUANT.
2	4.2.000.9473	CABO SO-SOW 12AWGX3C 600V 90º	CABLE SO-SOW 12AWGX3C 600V 90º	1
2	4.2.000.9470	CABO SJTW 12AWGX3C 105º	CABLE SJTW 12AWGX3C 105ºC	1

CÓDIGO	DESIGNAÇÃO	DESIGNATION
4.0.000.0850	TUBO TEFLON CALIBRADO Φ6X4MM	CALIBRATED TEFLON PIPE Φ6X4MM

restoranu.eu

Management System ISO 9001:2015
TÜVRheinland CERTIFIED
www.tuv.com ID 9108624282

www.fiamma.pt

This drawing may be altered without previous notice.
Os elementos deste desenho podem ser alterados sem aviso prévio.

R00

ESQUEMA ELECTRICO

Electric Scheme

MÁQ. CAFÉ COMPASS 2 SE

ESPRESSO COFFEE MACHINE COMPASS 2 SE

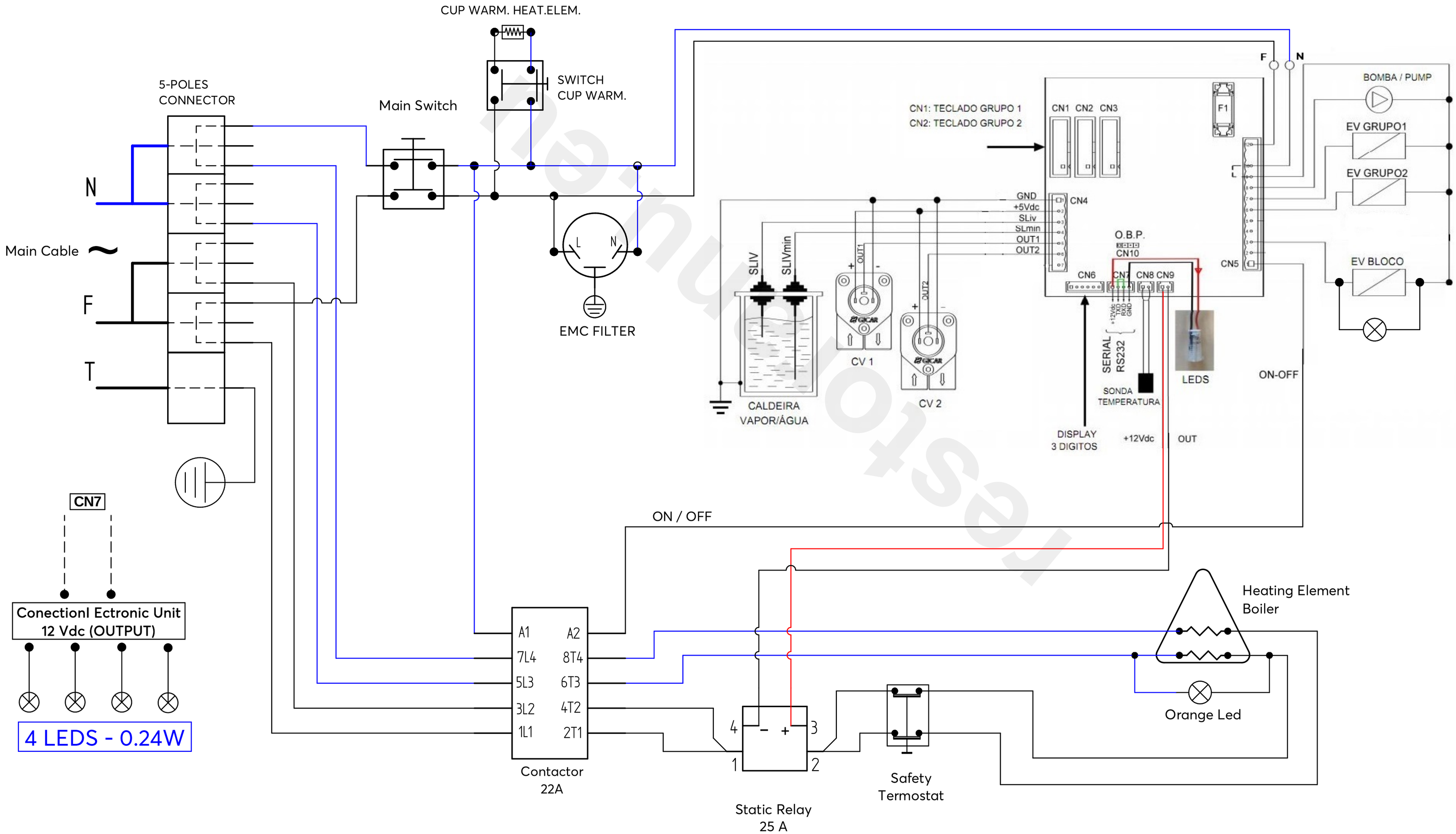

This drawing may be altered without previous notice.
Os elementos deste desenho podem ser alterados sem aviso prévio.

www.fiamma.pt

Management System ISO 9001:2015

MB „Restoranų įranga“ · Vilo Gerulaičio 1-59, LT-08200 Vilnius · +370 614 89888 · info@restoranu.eu · www.restoranu.eu