SINCE 1977

Explosion Drawing
Desenho de Explosão



ESPRESSO COFFEE MACHINE • MÁQUINA CAFÉ ESPRESSO

COMPASS 3 DB WHITE
COMPASS 3 DB BLACK
COMPASS 3 DB TC WHITE
COMPASS 3 DB TC BLACK

restoranu

20210317

Management System ISO 9001:2015 · TÜVRheinland CERTIFIED · www.tuv.com ID 9108624282

www.fiamma.pt

This drawing may be altered without previous notice.
Os elementos deste desenho podem ser alterados sem aviso prévio.

MÁQ. CAFÉ COMPASS 3 DB

ESPRESSO COFFEE MACHINE COMPASS 3 DB

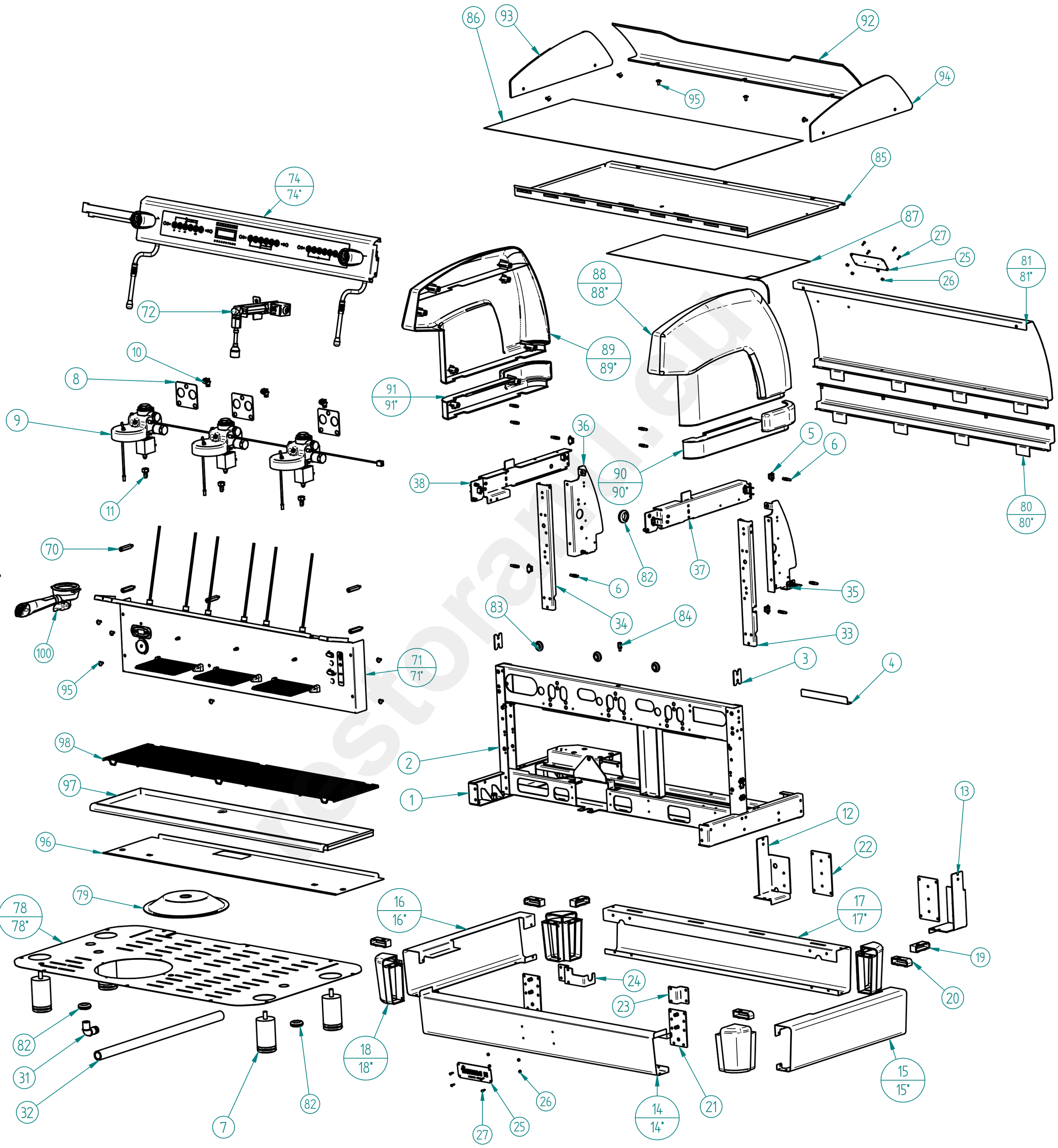

Management System ISO 9001:2015
TÜVRheinland CERTIFIED
www.tuv.com ID 9108624282

www.fiamma.pt

This drawing may be altered without previous notice.
Os elementos deste desenho podem ser alterados sem aviso prévio.

MÁQ. CAFÉ COMPASS 3 DB

R03

ESPRESSO COFFEE MACHINE COMPASS 3 DB

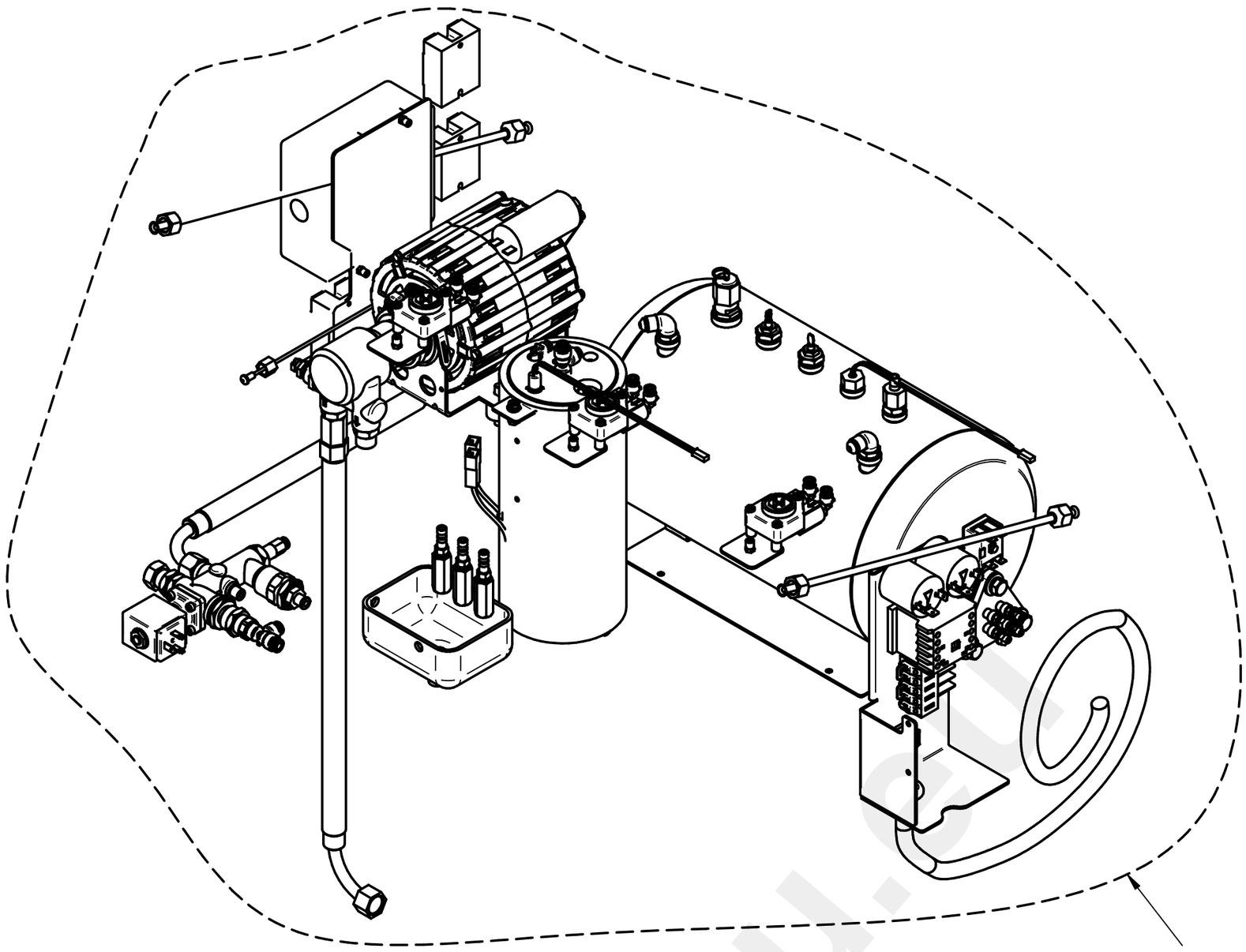

COMPONENTES INTERNOS
(INTERNAL COMPONENTS)

COMPONENTES INTERNOS
(INTERNAL COMPONENTS)

restoranu.eu

MÁQ. CAFÉ COMPASS 3 DB

ESPRESSO COFFEE MACHINE COMPASS 3 DB

LISTA DE COMPONENTES E ACESSÓRIOS
Spare parts list

ITEM Nº	CÓDIGO	DESIGNAÇÃO	DESIGNATION	QUANT.
1	7.0.018.5511	CHASSI HORIZONTAL ATLANTIC 3 ECC	HORIZONTAL CHASSIS ATLANTIC 3 ECC	1
2	7.0.018.5512	CHASSI VERTICAL ATLANTIC 3 ECC	VERTICAL CHASSIS ATLANTIC 3 ECC	1
3	7.0.016.5519	CHAPA COMPENSAÇÃO CHASSI VERT. ATLANTIC ECC	COMPENSATION PLATE VERT. CHASSIS ATLANTIC ECC	2
4	7.0.007.0270	PROTECÇAO INTERRUPTOR GERAL COMPASS TC	SWTICH PROTETION COMPASS TC	1
5	4.0.025.0085	MOLA FIXADORA PAINEL LAT.	FIXER SPRING	8
6	4.0.025.0090	PERNO FIXACÇAO PAINEL LAT.	FIXER PIN	12
7	4.0.000.0801	PE MAQ. DE CAFE 50X80	FEET FOR COFFE MACHINE 50X80	4
8	4.0.028.0002	JUNTA GRUPO ECC-07	ECC-07 GROUP GASKET	3
9	7.0.028.1153-B	GRUPO ECC-07 C/ RESIST. CONJ.	ECC-07 GROUP W/RESIST.	3
10	4.0.000.0103-A	RACORD L G1/8-TUBO Ø4	"L" FITTING G1/8-TUBO Ø4	3
11	4.0.000.0198	RACORD DESCARGA ELECTROVALVULA	ELECTROVALVE DRAINAGE RACCORD	3
12	7.0.007.0017	FIXADOR PAINEL POST. INF. ESQ. COMPASS	LEFT REAR PANEL LOWER FASTENER	1
13	7.0.007.0016	FIXADOR PAINEL POST. INF. DIR. COMPASS	RIGHT REAR PANEL LOWER FASTENER	1
14	7.0.008.0540-A	PAINEL FRONTAL INF. C/ FUROS COMPASS 3 WHITE	LOWER FRONTAL PANEL W/ HOLES COMPASS 3 WHITE	1
15	7.0.007.0505	PAINEL LATERAL INF. DIR. COMPASS WHITE	LOWER RIGHT SIDE PANEL COMPASS WHITE	1
16	7.0.007.0510	PAINEL LATERAL INF. ESQ. COMPASS WHITE	LOWER LEFT SIDE PANEL COMPASS WHITE	1
17	7.0.008.0515	PAINEL POSTERIOR INF. COMPASS 3 WHITE	LOWER REAR PANEL COMPASS 3 WHITE	1
18	4.0.007.0091-A	CANTO COMPASS WHITE	CORNER COMPASS WHITE	4
19	4.0.007.0004	POSTIÇO 1 CANTO COMPASS	CORNER INSERT 1 COMPASS	3
20	4.0.007.0005	POSTIÇO 2 CANTO COMPASS	CORNER INSERT 2 COMPASS	3
21	7.0.007.0010	REFORÇO PAINEL FRONTAL INF. COMPASS	FRONT PANEL LOWER SUPPORT	2
22	7.0.007.0015	REFORCO PAINEL POST. INF. COMPASS	REAR PANEL LOWER COMPASS	2
23	7.0.007.0011	FIXADOR PAINEL FRONTAL INF. COMPASS	FRONT PANEL LOWER FASTENER	1
24	7.0.007.0012	FIXADOR PAINEL FRONTAL INF. / BLOCO COMPASS	FRONT PANEL LOWER FASTENER	1
25	4.0.000.0830	ETIQUETA INOX FIAMMA C/ FUROS	FIAMMA STAINLESS STEEL LABEL W/ HOLES	2
26	4.2.000.9170	PORCA M3 ZINC. DIN934	M3 NUT ZINC. DIN934	8
27	4.2.000.9618	PARAFUSO CAB. OVAL UMBR. M3X10 INOX	SCREW M3x10	8
28	4.0.000.0195	RACORD CAMPANULA DESCARGA GRUPO	INNER RACORD OF THE DRAINAGE ASSEMBLY	3
29	4.0.000.0190	CAMPANULA DESCARGA GRUPO	OUTER RACORD OF THE DRAINAGE ASSEMBLY	3
30	4.0.000.0840	DEPOSITO ESGOTO PLASTICO	DRAIN TRAY	1
31	4.0.000.0845	RACORD L DEPOSITO ESGOTO PLASTICO	ANGLE RACORD	1
32	4.0.000.0222	TUBO ESGOTO	DRAIN TUBE	1
33	7.0.016.1055	CANTO POSTERIOR DIR. ATLANTIC NV	RIGHT REAR SUPPORT ATLANTIC NV	1
34	7.0.016.1054	CANTO POSTERIOR ESQ. ATLANTIC NV	LEFT REAR SUPPORT ATLANTIC NV	1
35	7.0.007.0021	SUPORTE PAINEL POST. DIR. COMPASS	RIGHT REAR PANEL SUPPORT COMPASS	1
36	7.0.007.0022	SUPORTE PAINEL POST. ESQ. COMPASS	LEFT REAR PANEL SUPPORT COMPASS	1
37	7.0.007.0064	SUPORTE PAINEL LAT. SUP. DIR. COMPASS	UPPER RIGHT SIDE PANEL SUPPORT COMPASS	1
38	7.0.007.0065-A	SUPORTE PAINEL LAT. SUP. ESQ. COMPASS	UPPER LEFT SIDE PANEL SUPPORT COMPASS	1
39	7.0.007.0142	BLOCO ENTRADA AGUA CONJ. NV COMPASS	WATER INLET ASS. COMPASS	1
40	4.0.000.0097	CONECTOR RAPIDO TUBO ø6	FAST TUBE CONNECTOR ø6	1
41	4.0.000.0093	TAMPAO TUBO ø6	TUBE COVER ø6	1
42	4.0.016.0014	TAMPAO G3/8F LATAO	BRASS COVER G3/8F	1
43	7.0.007.0007	SUPORTE CONTADOR VOLUMETRICO COMPASS DB	SUPORTE CONTADOR VOLUMETRICO COMPASS DB	3
44	4.2.000.9071	PARAFUSO CAB. SEXT. M5X12 ZINC. DIN933	SREW M5X12	3
45	5.0.000.0912	TUBO LIGAÇAO BOMBA C/ CURVA 330MM	PUMP CONNECTION W/ ELBOW 330MM	1
46	7.0.008.0024	APOIO CALDEIRA COMPASS 3	BOILER SUPPORT COMPASS 3	1
47	7.0.007.0031	SUPORTE UNIDADE ELECTR. COMPASS	ELECTRONIC UNIT SUPPORT COMPASS DB	1
48	4.0.091.0003	CONTACTOR 22A-AC1 BOBINE 230V	CONTACTOR 22A-AC1 230V	1
49	7.0.007.0030	DISSIPADOR RELE ESTATICO	RELAY HEATSINK	2
50	4.0.000.0991	RELE ESTATICO 25A	25A SOLID STATE RELAY	5
51	PRÉ-MONTAGEM	PM_CONTADOR VOLUMETRICO COMPASS DB	VOLUMETRIC DOSER COMPASS DB	3
52	7.0.028.1022-A	APOIO CALDEIRA INOX 0.5LT	0,5L INOX BOILER SUPPORT	1
53	4.2.000.9180	PORCA M5 ZINC. C/ RECART. DIN6923	M5 NUT ZINC. DIN6923	1
54	4.2.000.9172	PORCA M5 ZINC. DIN934	M5 NUT ZINC. DIN934	1
55	4.2.000.9136	ANILHA RECART. M5 ZINC DIN933	ZINC-PLATED TOOTHED WASHER M5 DIN6798A	2
56	4.2.000.9072	PARAFUSO CAB. SEXT. M5X16 ZINC. DIN933	SREW M5X16	1
57	7.0.007.0170-A	CALDEIRA INOX 1,2LT 2500W CONJ. DUAL BOILER	2500W 1,2LT STAINLESS STEEL BOILER ASSEMB.	1
58	PRÉ-MONTAGEM	CALDEIRA 12 LT DB C/ ACESSORIOS CONJ.	12 LT DB BOILER W/ ACESS. ASS.	1
59	4.0.000.0109	RACORD L G1/4 TUBO TEFLON ø6	ø6 G1/4 TEFLON TUBE L RACORD	1
60	4.0.000.0108	RACORD L G1/8 TUBO TEFLON ø6	ø6 G1/8 TEFLON TUBE L RACORD	2

Restorana.eu

MÁQ. CAFÉ COMPASS 3 DB

ESPRESSO COFFEE MACHINE COMPASS 3 DB

LISTA DE COMPONENTES E ACESSÓRIOS
Spare parts list

ITEM Nº	CÓDIGO	DESIGNAÇÃO	DESIGNATION	QUANT.
61	4.0.000.0085	RACORD INJECÇÃO	INJECTION RACORD	2
62	4.0.000.0013	ANILHA 13x17MM (G1/4) COBRE	GASKET G1/4 CU	2
63	4.2.000.9097	PARAFUSO CAB. SEXT. M8X10 ZINC. DIN933	SCREW M8X10	2
64	4.2.000.9147	ANILHA MOLA M8 ZINC. DIN127B	M8 SPRING WASHER	2
65	4.0.000.0032	APOIO MOTOR	MOTOR SUPPORT	4
66	7.0.007.0124	MOTOR GR. BOMBA CONJ.	PUMP-MOTOR ASS. RPM	1
67	4.0.000.0040	PORTA FILTRO ENT. AGUA C/ FILTRO NIPLESS	FILTER HOLDER OF WATER INLET	1
68	4.0.000.0818	TUBO ALIMENTAÇÃO C/ CURVA 1500MM	WATER INLET PIPE 1500MM	1
69	4.0.000.0865	UNIDADE ELECTRONICA DELUXE FULL RANGE 100-240V IOT	ELECT. BOARD DELUXE FULL RANGE 110-240V IOT	1
70	4.0.028.0070	SEPARADOR BLINDAGEM ELECTROV. GRUPOS	SHIELD GROUP SEPARATOR	5
71	PRÉ-MONTAGEM	PM_PAINEL FRONTAL CONJ. COMPASS 3 DB TC	FRONT PANEL ASS. COMPASS 3 DB TC	1
72	7.0.007.0105-A	TORNEIRA AGUA COMPASS	WATER TAP COMPASS	1
73	7.0.000.0022	TUBO CAPILAR 1,27X2,5X1000	CAPILLARY TUBE	1
74	PRÉ-MONTAGEM	PM_PAINEL COMANDO SUPERIOR CONJ. COMPASS 3 DB	UPPER COMMAND PANEL ASS. COMPASS 2 DB	1
75	7.0.028.1106	TUBO TORNEIRA VAPOR ESQ. PACIFIC 2 MB	LEFT STEAM TAP TUBE PACIFIC 2 MB	1
76	7.0.007.0095	TUBO CALDEIRA TORN. VAPOR DIR. COMPASS	STEAM BOILER RIGHT TAP TUBE COMPASS	1
77	7.0.007.0111	CABO H07RN-F 5G4-1,8MT CONJ. COMPASS 3	FEEDING CABLE H07RN-F 5G4-1,8MT ASS. COMPASS 3	1
78	7.0.008.0293	BLINDAGEM FUNDO NV COMPASS 3 TC NV	BOTTOM SHIELD NV COMPASS 3 TC NV	1
79	4.0.007.0207	SAIDA BLINDAGEM FUNDO COMPASS TC	EXIT BOTTOM SHIELD COMPASS TC	1
80	7.0.008.0525	PAINEL POSTERIOR COMPASS 3 TC WHITE	REAR PANEL COMPASS 3 TC WHITE	1
81	7.0.008.0545	PAINEL POSTERIOR C/ FUROS COMPASS 3 WHITE	REAR PANEL COMPASS 3 WHITE	1
82	4.0.000.0372	PASSA FIOS P/ FURO ø25MM	WIRE PROTECTION	3
83	4.0.007.0015	PASSA FIOS Nº3	WIRE PROTECTION Nº3	3
84	4.0.007.0205	SEPARADOR TABULEIRO SUPERIOR COMPASS TC	UPPER TRAY SEPARATOR COMPASS TC	1
85	7.0.008.0086	TABULEIRO SUPERIOR COMPASS 3 NV2	UPPER TRAY COMPASS 3	1
86	7.0.008.0089	GRELHA REDE 830X360	WIRE MESH GRID 830X360	1
87	5.0.000.0809-A	RESIST. ESCALDA CHAV. 530X230MM 75W 230V	HEATING ELEMENT FOR CUP HEATING	1
88	4.0.007.0081	PAINEL LATERAL DIR. COMPASS WHITE	RIGHT SIDE PANEL COMPASS WHITE	1
89	4.0.007.0085	PAINEL LATERAL ESQ. COMPASS WHITE	LEFT SIDE PANEL COMPASS WHITE	1
90	4.0.007.0281	PAINEL LATERAL DIR. COMPASS TC WHITE	RIGHT SIDE PANEL COMPASS TC WHITE	1
91	4.0.007.0285	PAINEL LATERAL ESQ. COMPASS TC WHITE	LEFT SIDE PANEL COMPASS TC WHITE	1
92	4.0.008.0011	ACRILICO POSTERIOR COMPASS 3	REAR ACRYLIC COMPASS 3	1
93	4.0.007.0010	ACRILICO LATERAL ESQ. COMPASS	ACRYLIC LEFT SIDE COMPASS	1
94	4.0.007.0009	ACRILICO LATERAL DIR. COMPASS	ACRYLIC RIGHT SIDE COMPASS	1
95	4.2.000.9116	PARAFUSO CAB. OVAL LARGA M5X10 NIQ	SCREW M5X10	13
96	7.0.008.0080	BLINDAGEM INFERIOR TAB. INF. COMPASS 3	COMPASS 3 LOWER TRAY SHIELDING	1
97	7.0.008.0081	TABULEIRO INFERIOR COMPASS 3	LOWER TRAY COMPASS 3	1
98	4.0.008.0150	GRELHA TABULEIRO INF. ARAME COMPASS 3	WIRE TRAY GRID COMPASS 3	1
99	5.0.000.0624	PORTA FILTRO REFORÇADO CONJ. RST BRANCO - 2 BICAS	FILTER HOLD. REINF. ASSEMB. RST WHITE - 2 COFFEE CUP	3
100	5.0.000.0621-A	PORTA FILTRO REFORÇADO CONJ. RST BRANCO - 1 BICA	FILTER HOLD. REINF. ASSEMB. RST WHITE - 1 COFFEE CUP	1

MODELO 208-240V/60HZ / *MODEL 208-240V/60HZ*

ITEM Nº	CÓDIGO	DESIGNAÇÃO	DESIGNATION	QUANT.
48*	4.0.091.0001	CONTACTOR 22A-AC1 BOBINE 208V	CONTACTOR 22A-AC1 COIL 208V	1

MODELO IOT / *IOT MODEL*

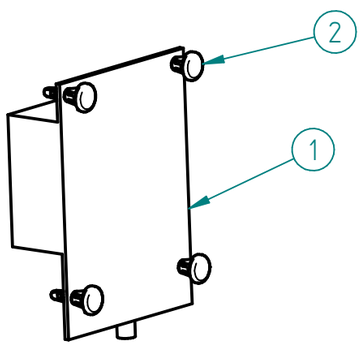

ITEM Nº	CÓDIGO	DESIGNAÇÃO	DESIGNATION	QUANT.
1	4.0.000.0978	PLACA ELECTRONICA IOT	IOT ELECTRONIC UNIT	1
2	4.0.000.0915	ESPAÇADOR PLASTICO 6,4MM	PLASTIC SPACER 6,4MM	4

Restoranu

MÁQ. CAFÉ COMPASS 3 DB

ESPRESSO COFFEE MACHINE COMPASS 3 DB

LISTA DE COMPONENTES E ACESSÓRIOS OUTRAS VERSÕES

Spare parts list other versions

ITEM Nº	CÓDIGO	DESIGNAÇÃO	DESIGNATION	MOD./MODEL	QUANT.
*14**	*7.0.008.0541*	*PAINEL FRONTAL INF. C/ FUROS COMPASS 3 BLACK*	*FRONT BLACK PANEL LOWER COMPASS 3*	*MAQ. CAFE COMPASS 3 DB BLACK / MAQ. CAFE COMPASS 3 DB TC BLACK*	*1*
*15**	*7.0.007.0506*	*PAINEL LATERAL INF. DIR. COMPASS BLACK*	*LOWER RIGHT SIDE PANEL COMPASS BLACK*	*MAQ. CAFE COMPASS 3 DB BLACK / MAQ. CAFE COMPASS 3 DB TC BLACK*	*1*
*16**	*7.0.007.0511*	*PAINEL LATERAL INF. ESQ. COMPASS BLACK*	*LOWER LEFT SIDE PANEL COMPASS BLACK*	*MAQ. CAFE COMPASS 3 DB BLACK / MAQ. CAFE COMPASS 3 DB TC BLACK*	*1*
*17**	*7.0.008.0516*	*PAINEL POSTERIOR INF. COMPASS 3 BLACK*	*LOWER REAR PANEL COMPASS 3 BLACK*	*MAQ. CAFE COMPASS 3 DB BLACK / MAQ. CAFE COMPASS 3 DB TC BLACK*	*1*
*18**	*4.0.007.0092-A*	*CANTO COMPASS BLACK*	*CORNER COMPASS BLACK*	*MAQ. CAFE COMPASS 3 DB BLACK / MAQ. CAFE COMPASS 3 DB TC BLACK*	*4*
*71**	*PRÉ-MONTAGEM*	*PM_PAINEL FRONTAL COMPASS 3 DB*	*FRONT PANEL COMPASS 3 DB*	*MAQ. CAFE COMPASS 3 DB WHITE / MAQ. CAFE COMPASS 3 DB BLACK*	*1*
*73**	*PRÉ-MONTAGEM*	*PM_PAINEL COMANDO SUPERIOR CONJ. COMPASS 3 DB*	*UPPER COMMAND PANEL ASS. COMPASS 3 DB*	*MAQ. CAFE COMPASS 3 DB BLACK / MAQ. CAFE COMPASS 3 DB TC BLACK*	*1*
78*	7.0.008.0091	BLINDAGEM FUNDO COMPASS 3	BOTTOM SHIELD COMPASS 3	MAQ. CAFE COMPASS 3 DB WHITE / MAQ. CAFE COMPASS 3 DB BLACK	
*80**	*7.0.008.0526*	*PAINEL POSTERIOR COMPASS 3 TC BLACK*	*REAR PANEL COMPASS 3 TC BLACK*	*MAQ. CAFE COMPASS 3 DB TC BLACK*	*1*
*81**	*7.0.008.0546*	*PAINEL POSTERIOR C/ FUROS COMPASS 3 BLACK*	*REAR PANEL W/ HOLES COMPASS 3 BLACK*	*MAQ. CAFE COMPASS 3 DB BLACK / MAQ. CAFE COMPASS 3 DB TC BLACK*	*1*
*88**	*4.0.007.0082-A*	*PAINEL LATERAL DIR. COMPASS BLACK*	*RIGHT SIDE PANEL COMPASS BLACK*	*MAQ. CAFE COMPASS 3 DB BLACK / MAQ. CAFE COMPASS 3 DB TC BLACK*	*1*
*89**	*4.0.007.0086-A*	*PAINEL LATERAL ESQ. COMPASS BLACK*	*LEFT SIDE PANEL COMPASS BLACK*	*MAQ. CAFE COMPASS 3 DB BLACK / MAQ. CAFE COMPASS 3 DB TC BLACK*	*1*
*90**	*4.0.007.0282*	*PAINEL LATERAL DIR. COMPASS TC BLACK*	*RIGHT SIDE PANEL COMPASS TC BLACK*	*MAQ. CAFE COMPASS 3 DB TC BLACK*	*1*
*91**	*4.0.007.0286*	*PAINEL LATERAL ESQ. COMPASS TC BLACK*	*LEFT SIDE PANEL COMPASS TC BLACK*	*MAQ. CAFE COMPASS 3 DB TC BLACK*	*1*

9 - 7.0.028.1153-B - GRUPO ECC-07 C/ RESIST. CONJ.

9 - ECC-07 GROUP W/ RESIST.

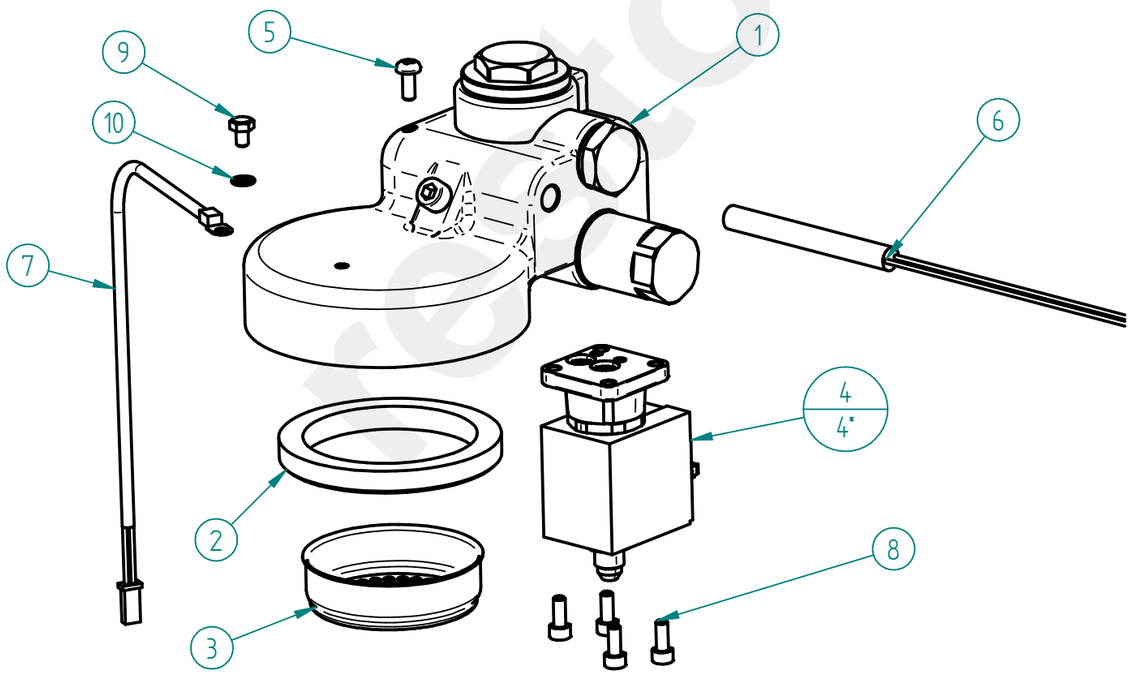

ITEM Nº	CÓDIGO	DESIGNAÇÃO	DESIGNATION	QUANT.
1	4.0.028.0000	GRUPO ECC-07 C/ RESIST.	ECC-07 GROUP W/ RESIST.	1
2	5.0.025.0012	JUNTA PORTA FILTRO 58X74X8,5MM (GR B-61/ECC-07)	FILTER HOLDER GASKET	1
3	5.0.025.0041	CRIVO GRUPO NANOTECH	GROUP SHOWER SCREEN NANOTECH	1
4	5.0.000.1130	ELECTROVALVULA 3 VIAS 230V C/ ORING - BASE LATAO	ELECTROVALVE 3 WAYS 230V W/ ORING - BRASS BASE	1
5	4.2.000.9055	PARAFUSO CAB. PH M4X10 ZINC. DIN7985	ZINC-PLATED PHILLIPS HEAD SCREW M4X10	1
6	4.0.028.0060	RESISTENCIA CARTUCHO ø8 150W-230V	CARTRIDGE HEAT. ELEM. Ø8 150W 230V W/TERM.	1
7	4.0.000.0940	SONDA TEMPERATURA Ø4,25	TEMPERATURE PROBE Ø4,25	1
8	5.0.000.0575	PARAF. UMBRACO M4X10 INOX DIN912	M4X10 INOX DIN912 UMBRACO SCREW	4
9	4.2.000.9061	PARAFUSO CAB. SEXT. M4X6 NIQ. DIN933	M4X6 NIQ. DIN933 HEX HEAD SREW	1
10	4.2.000.9135	ANILHA RECART. M4 ZINC. DIN6798A	ZINC-PLATED TOOTHED WASHER M4 DIN6798A	1

Management System ISO 9001:2015 TÜVRheinland CERTIFIED www.tuv.com ID 9108624282

www.fiamma.pt

This drawing may be altered without previous notice.
Os elementos deste desenho podem ser alterados sem aviso prévio.

MÁQ. CAFÉ COMPASS 3 DB

ESPRESSO COFFEE MACHINE COMPASS 3 DB

MODELO 208-240V/60HZ / *MODEL 208-240V/60HZ*

9- 7.0.028.1152 -B- GRUPO ECC-07 C/ RESIST. CONJ. 208-240V/60Hz

9 - ECC-07 GROUP W/ HEATING ELEMENT ASSEMB. 208-240V/60Hz

ITEM Nº	CÓDIGO	DESIGNAÇÃO	DESIGNATION	QUANT.
4*	5.0.000.1130	ELECTROVALVULA 3 VIAS 230V C/ ORING - BASE LATAO	ELECTROVALVE 3 WAYS 230V W/ ORING - BRASS BASE	1

1 - 4.0.028.0000 - GRUPO ECC-07 C/ RESIST.

1 - ECC-07 GROUP W/ RESIST.

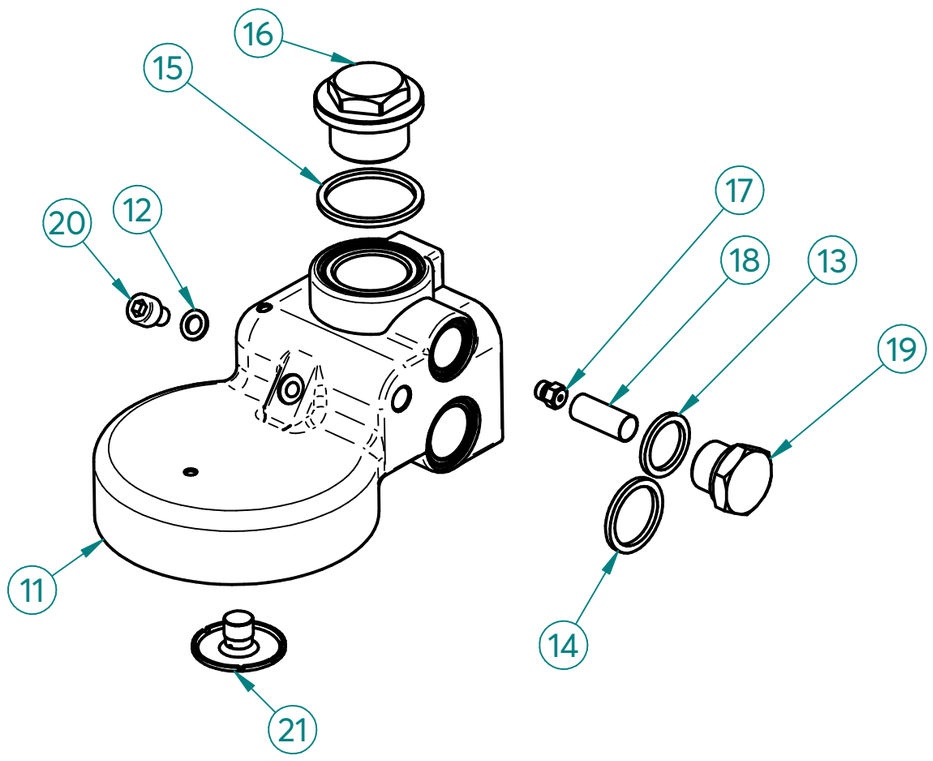

ITEM Nº	CÓDIGO	DESIGNAÇÃO	DESIGNATION	QUANT.
11	5.0.028.0100	CORPO GRUPO MB	BODY OF THE GROUP MB	1
12	5.0.025.0015	JUNTA TEFLON 10X6X1MM	TEFLON GASKET 10X6X1MM	1
13	5.0.025.0022	JUNTA TEFLON 22X17X2MM	TEFLON GASKET 22X17X2MM	1
14	5.0.016.0106	JUNTA TEFLON 22X17X2MM	TEFLON GASKET 26X21X2MM	1
15	5.0.025.0002	JUNTA TEFLON 35X30X2MM GR B-61	TEFLON GASKET 35X30X2MM (GR B-61)	1
16	5.0.016.0102	TAMPAO SUPERIOR M26X1,5 CROM. GR ECC-07	UPPER CHROM. COVER M26X1,5 (GR ECC-07)	1
17	5.0.016.0110	INJECTOR 0.7 M6X0,75 (GR ECC-07)	INJECTOR 0,7 M6X0,75 (GR ECC-07)	1
18	5.0.025.0023	FITRO INOX INJECTOR	GROUP GIGLEUR FILTER	1
19	5.0.025.0021	TAMPAO G3/8 CROM. (GR B-61/GR EC-07)	CHROM. COVER G3/8 (GR B-61/GR ECC-07)	1
20	5.0.025.0003	PARAFUSO UMBRACO M6X10 INOX (GR B-61/ECC-07)	FRONT INOX SCREW M6X10 OF THE GROUP B-61	1
21	5.0.025.0009	DISTRIBUIDOR GRUPO B-61/ECC-07	OUTLET GROUP B-61/ECC-07	1

39 - 7.0.007.0142 - BLOCO ENTRADA AGUA CONJ. NV COMPASS

39 - WATER INLET ASS. COMPASS

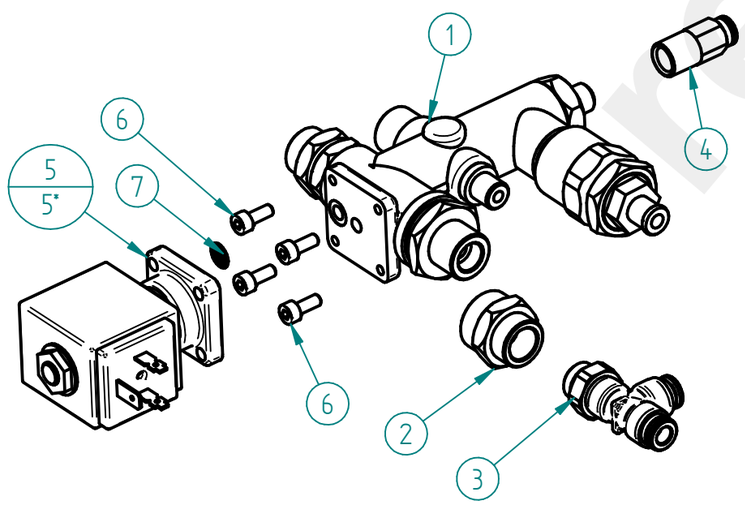

ITEM Nº	CÓDIGO	DESIGNAÇÃO	DESIGNATION	QUANT.
1	4.0.016.0010	BLOCO ENTRADA AGUA ECC-07 (AUT.)	WATER INLET ASS.	1
2	4.0.000.0116	RACORD G1/4F-G3/8F NIQ.	G1/4F-G3/8F NICKEL RACORD	1
3	4.0.000.0095	RACORD T LATERAL G1/4 TUBO ø6	T SIDE FITTING G1/4 - Ø6 PIPE	1
4	4.0.000.0110	RACORD G1/8F TUBO TEFLON ø6 INOX	STAINLESS STEEL FITTING G1/8F - ø6 PIPE	1
5	5.0.000.1124	ELECTROVALVULA 2 VIAS 230V - BASE LATAO	ELECTROVALVE 2 WAYS 230V - BRASS BASE	1
6	5.0.000.0575	PARAF. UMBRACO M4X10 INOX DIN912	M4X10 INOX DIN912 UMBRACO SCREW	4
7	5.0.000.0181	FILTRO BASE ELECTROVAL. Ø9MM	ELECTROVAL. FILTER Ø9MM	1

MODELO 208-240V/60HZ / *MODEL 208-240V/60HZ*

39 - 7.0.007.0143 - BLOCO ENTRADA AGUA CONJ. 208-240V/60Hz NV COMPASS

39 - WATER INLET ASSEMB. 208-240V/60Hz NV COMPASS

ITEM Nº	CÓDIGO	DESIGNAÇÃO	DESIGNATION	QUANT.
5*	5.0.000.0144	ELECTROVALVULA 2 VIAS 208-240V/60HZ (PARKER)-ENT. AGUA	2WAY SOL.VALVE 208-240V/60HZ (PARKER)-PARAL. WATER INLET TAP	1

Management System ISO 9001:2015 TÜVRheinland CERTIFIED www.tuv.com ID 9108624282

www.fiamma.pt

This drawing may be altered without previous notice.
Os elementos deste desenho podem ser alterados sem aviso prévio.

MÁQ. CAFÉ COMPASS 3 DB

ESPRESSO COFFEE MACHINE COMPASS 3 DB

51 - PM - CONTADOR VOLUMETRICO COMPASS DB

51 - VOLUMETRIC DOSER ASS. COMPASS DB

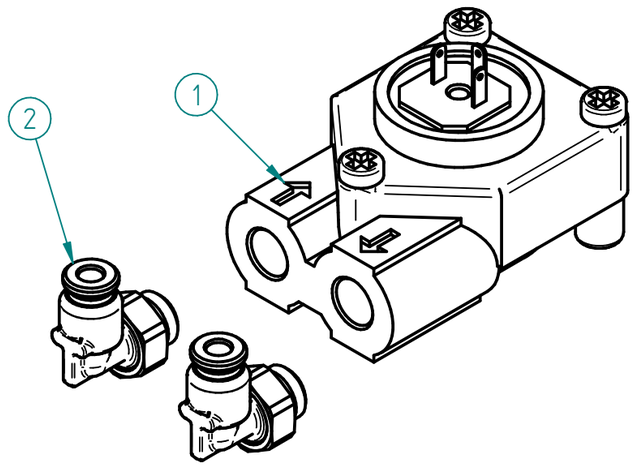

ITEM Nº	CÓDIGO	DESIGNAÇÃO	DESIGNATION	QUANT.
1	5.0.000.1012	CONTADOR VOLUMETRICO D1,15-G1/8 C/ LED	VOLUMETRIC DOSER D1,15-G1/8 W/ LED	1
2	4.0.000.0103-A	RACORD L G1/8-TUBO Ø4	"L" FITTING G1/8-TUBO Ø4	2

57 - 7.0.007.0170-A - CALDEIRA INOX 1,2LT 2500W CONJ. DUAL BOILER

57 - S/STEEL BOILER 1,2LT 2500W ASSEMB. DUAL BOILER

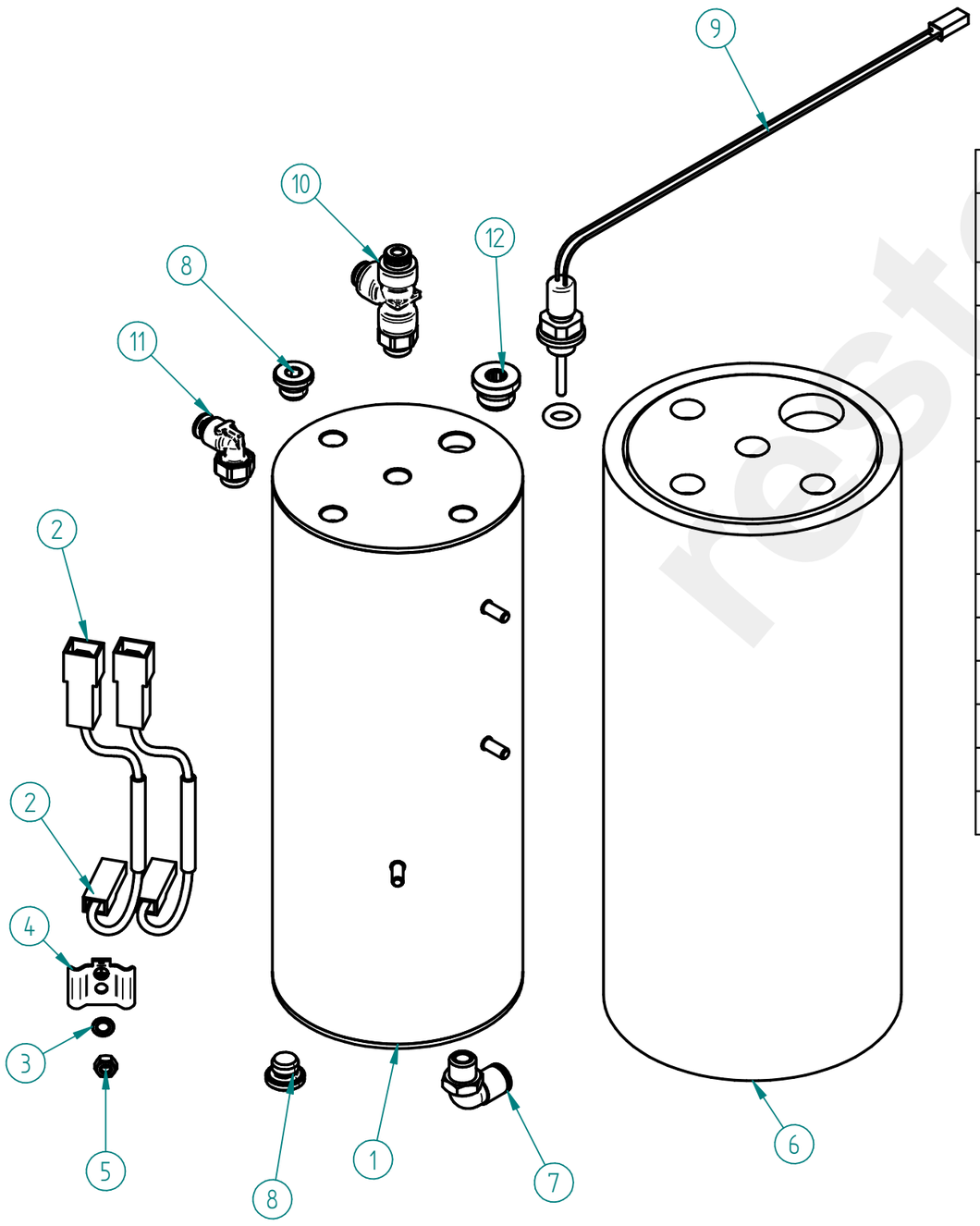

ITEM Nº	CÓDIGO	DESIGNAÇÃO	DESIGNATION	QUANT.
1	4.0.014.0063	CALDEIRA INOX 1,2LT 2500W S/ TERMOFUSIVEIS	S/STEEL BOILER 1,2LT 2500W WITHOUT THERMOFUSES	1
2	5.0.110.0037	TERMOFUSIVEL 128ºC	128ºC THERMOFUSE	2
3	4.2.000.9135	ANILHA RECART. M4 ZINC. DIN6798A	ZINC-PLATED TOOTHED WASHER M4 DIN6798A	1
4	5.0.110.0038	SUPORTE TERMOFUSIVEL	THERMOFUSE SUPPORT	1
5	4.2.000.9171	PORCA M4 ZINC. DIN934	M4 NUT ZINC. DIN934	1
6	4.0.000.0431	ISOLAMENTO CALDEIRA INOX OVAM 1.2LT	STAINSTEEL BOILER INSULATION OVAM 1,2 LT	1
7	4.0.000.0108	RACORD L G1/8 TUBO TEFLON ø6	ø6 G1/8 TEFLON TUBE L RACORD	1
8	4.0.000.0152	TAMPAO G1/8	G1/8 PLUG	2
9	4.0.000.0931	SONDA TEMPERATURA G1/8	TEMPERATURE PROBE G1/8	1
10	4.0.000.0094	RACORD T LATERAL G1/8 TUBO ø4	T SIDE FITTING G1/8 - Ø4 PIPE	1
11	4.0.000.0103-A	RACORD L G1/8-TUBO Ø4	"L" FITTING G1/8-TUBO Ø4	1
12	4.0.000.0158	TAMPAO G1/4 C/ ORING VITON	G1/4 CAP WITH VITON ORING	1
13*	4.0.028.0068	ORING 7X3 VITON	ORING 7X3 VITON	1

restoranu.eu

MÁQ. CAFÉ COMPASS 3 DB

ESPRESSO COFFEE MACHINE COMPASS 3 DB

58 - PM-CALDEIRA 12 LT DB C/ ACESSORIOS CONJ.

58 - 12 LT DB BOILER W/ ACESS. ASS.

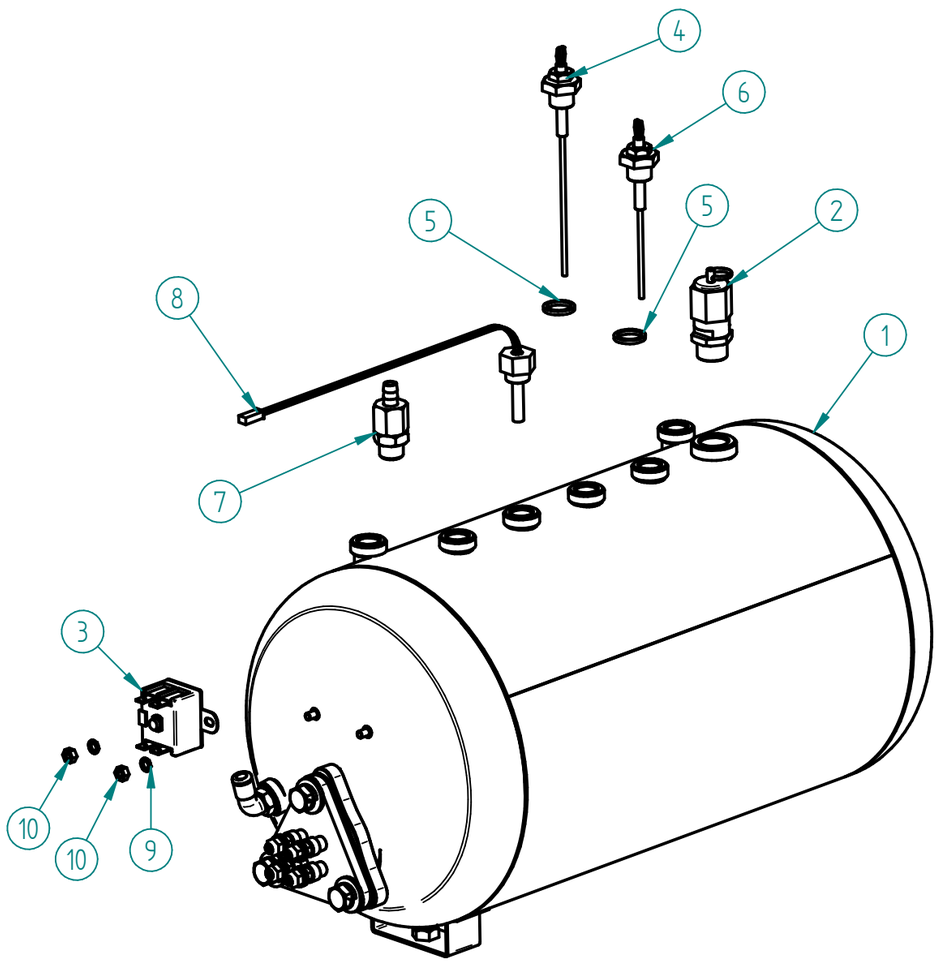

ITEM Nº	CÓDIGO	DESIGNAÇÃO	DESIGNATION	QUANT.
1	7.0.000.0558	CALDEIRA 12LT MB C/ PERM. C/ ACESS. TUB. COBRE	12LT MB BOILER W/ ACESS. COPPER TUBE	1
2	4.0.000.0058	VALVULA SEGURANÇA CALDEIRA G3/8 1,8BAR	BOILER SECURITY VALVE G3/8 1,8BAR	1
3	4.0.000.0250	TERMOSTATO SEGURANÇA 130°	SAFETY THERMOSTAT 130°	1
4	7.0.025.0002	SONDA ø2,5X135MM CONJ.	ø2,5X135MM PROBE ASS.	1
5	5.0.000.0315	JUNTA TEFLON 18X13,5X2MM	TEFLON GASKET	2
6	7.0.016.0070	SONDA ø2,5X105MM CONJ.	ø2,5X105MM PROBE ASS.	1
7	5.0.000.1002	VALVULA ANTI-VACUO	ANTI VACUUM VALVE	1
8	4.0.000.0941	SONDA TEMPERATURA G1/4-280MM	TEMPERATURE PROBE G1/4-280MM	1
9	4.2.000.9135	ANILHA RECART. M4 ZINC. DIN6798A	ZINC-PLATED TOOTHED WASHER M4 DIN6798A	2
10	4.2.000.9184	PORCA M4 LATAO DIN934	BRASS M4 NUT DIN934	2

1 - 7.0.000.0558- CALDEIRA 12LT MB C/ PREM. C/ ACESS TUB. COBRE

1 - 12LT MB BOILER WITH EXCHANGER AND ACESS.

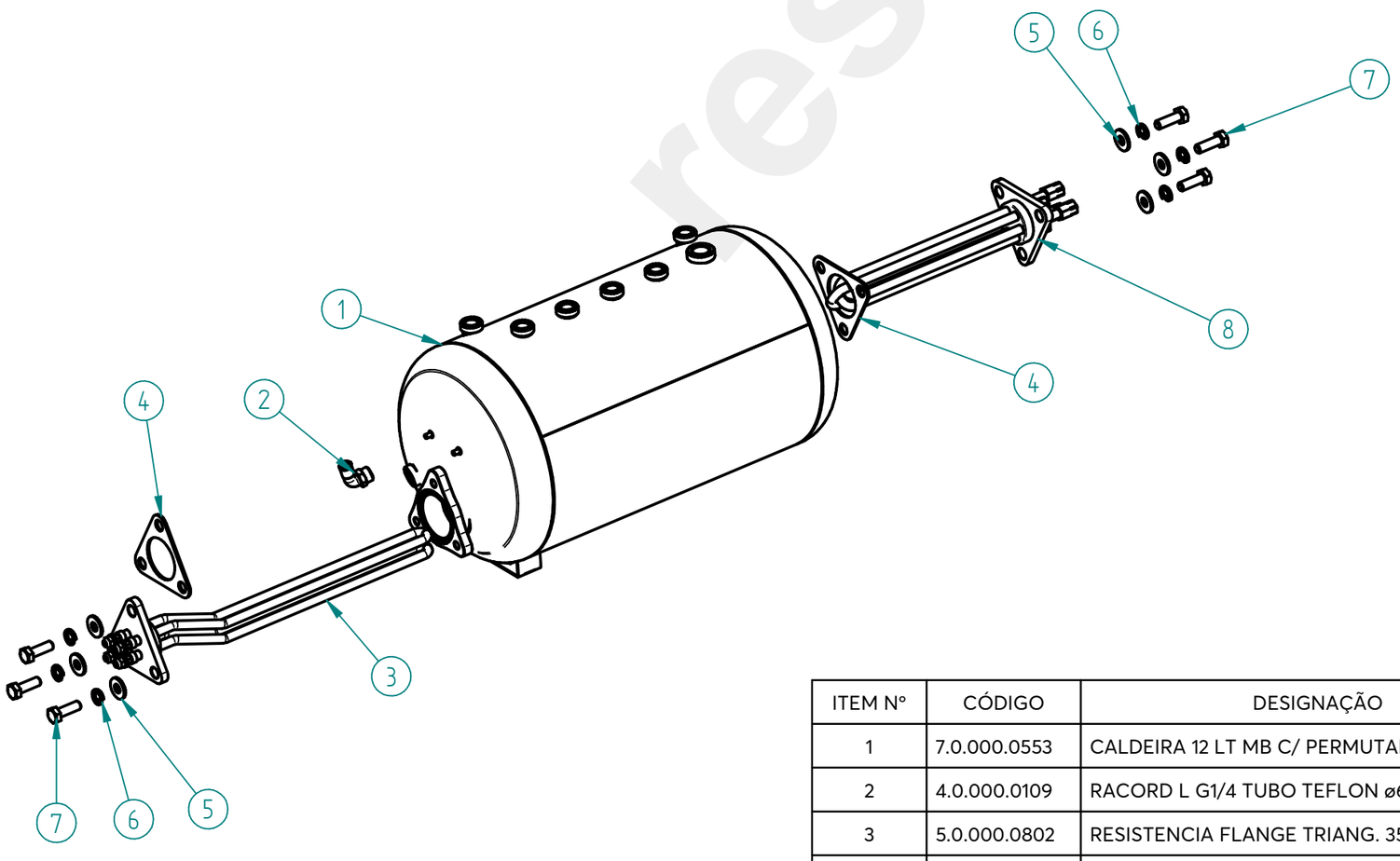

ITEM Nº	CÓDIGO	DESIGNAÇÃO	DESIGNATION	QUANT.
1	7.0.000.0553	CALDEIRA 12 LT MB C/ PERMUTADOR	12LT MB BOILER WITH EXCHANGER	1
2	4.0.000.0109	RACORD L G1/4 TUBO TEFLON ø6	ø6 G1/4 TEFLON TUBE L RACORD	1
3	5.0.000.0802	RESISTENCIA FLANGE TRIANG. 3500W 2GR	TRIANGULAR HEATING ELEMENT (3500 W)	1
4	7.0.000.0010	JUNTA DA RESISTENCIA TRIANGULAR	TRIANGULAR HEAT. ELEMENT GASKET	2
5	7.2.000.0015	ANILHA PLANA 2X20X8,5 ZINC.	FLAT RING 2X20X8.5	6
6	4.2.000.9147	ANILHA MOLA M8 ZINC. DIN127B	M8 SPRING WASHER	6
7	4.2.000.9086	PARAFUSO CAB. SEXT. M8X25 ZINC. DIN933	ZINC-PLATED HEX. HEAD SCREW M8X25 DIN933	6
8	7.0.000.0582	PERMUTADOR C/ FLANGE TRIANGULAR	EXCHANGER W/TRIANG. FLANGE	1

restoranu.eu

MÁQ. CAFÉ COMPASS 3 DB

ESPRESSO COFFEE MACHINE COMPASS 3 DB

66 - 7.0.007.0124 - MOTOR GR. BOMBA CONJ.

66 - PUMP MOTOR GR. ASS.

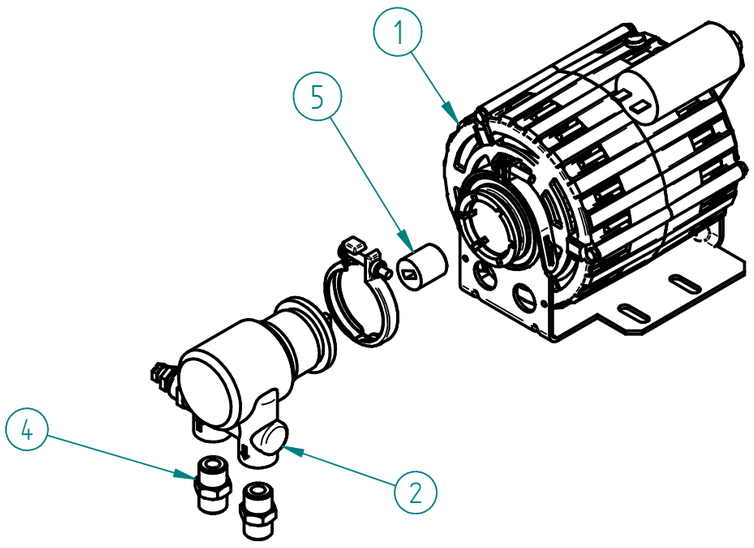

ITEM Nº	CÓDIGO	DESIGNAÇÃO	DESIGNATION	QUANT.
1	5.0.000.0485	MOTOR GR. P/ ACOPLAMENTO	MOTOR TO COUPLING	1
2	5.0.000.0040	BOMBA AGUA	WATER PUMP	1
4	4.0.000.0115	RACORD G3/8-G3/8 (BOMBA)	PUMP´S METAL SLEEVE	2
5	5.0.000.0474	ACOPLAMENTO MOTOR/BOMBA	MOTOR/PUMP COUPLING	1

71 - PM-PAINEL FRONTAL COMPASS 3 DB TC

71 - FRONT PANEL COMPASS 3 DB TC

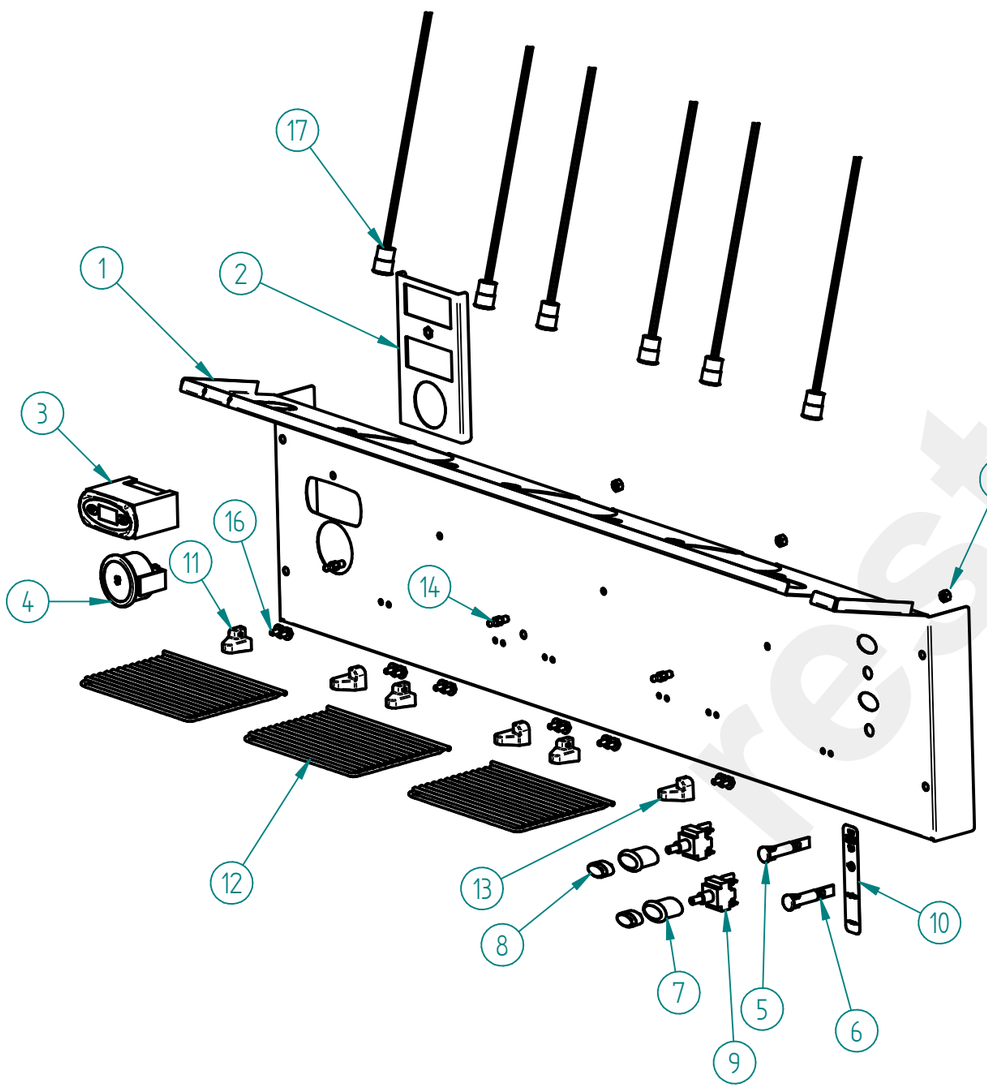

ITEM Nº	CÓDIGO	DESIGNAÇÃO	DESIGNATION	QUANT.
1	7.0.008.0274-A	PAINEL FRONTAL GRELHA ARAME COMPASS 3 TC NV2	FRONT PANEL COMPASS 3 TC NV	1
2	7.0.007.0033	SUPORTE MANOMETRO COMPASS	COMPASS GAUGE SUPPORT	1
3	4.0.000.0948	TERMOPID 3 TEMP.	TERMOPID 3 TEMP.	1
4	5.0.000.0391-A	MANOMETRO 0-16BAR	PRESSURE GAUGE 0-16BAR	1
5	4.0.025.0130	SINALIZADOR VERDE Ø10MM TERM. MACHO	GREEN LED Ø10MM	1
6	4.0.025.0135	SINALIZADOR LARANJA Ø10MM TERM. MACHO	ORANGE LED Ø10MM	1
7	4.0.000.0503	CAIXA ELIPSE D16	BOX D16 ELIPSE	2
8	4.0.000.0507	TASTO ELIPSE D16	SWITCH KEY D16	2
9	4.0.000.0513	INTERRUPTOR BIPOLAR E0070	TWO POLES SWITCH E0070	2
10	4.0.007.0064	AUTOCOLANTE INTERRUPTOR GERAL COMPASS	MAIN SWITCH SELF-STICKING PLATE COMPASS	1
11	4.0.016.7018-A	SUPORTE ESQUERDO GRELHA CHAVENAS ARAME	WIRE CUP LEFT SUPPORT	3
12	4.0.016.7015-A	GRELHA CHAVENAS ARAME CARAVEL/COMPASS/QUADRANT	WIRE COFFEE TRAY GRID	3
13	4.0.016.7017-A	SUPORTE DIREITO GRELHA CHAVENAS ARAME	WIRE CUP RIGHT SUPPORT	3
14	4.0.016.7020	FIXADOR GRELHA CHAVENAS ARAME	FIXER PIN	3
15	4.2.000.9172	PORCA M5 ZINC. DIN934	M5 NUT ZINC. DIN934	3
16	4.2.000.9126	PARAFUSO ROSCA PLASTICO K40X8 ZINC.	SCREW K40X8	12
17	4.0.007.0041-A	LED BRANCO ROSCADO Ø13MM 12V C/ CABO	FITTING WHITE LED Ø13MM 12V W/ CABLE	6

restoranu.eu

MÁQ. CAFÉ COMPASS 3 DB

ESPRESSO COFFEE MACHINE COMPASS 3 DB

OPCIONAL / *OPTIONAL*

71- PM-PAINEL FRONTAL COMPASS 3 DB TC TURBO STEAM

71 - FRONT PANEL COMPASS 3 DB TC TURBO STEAM

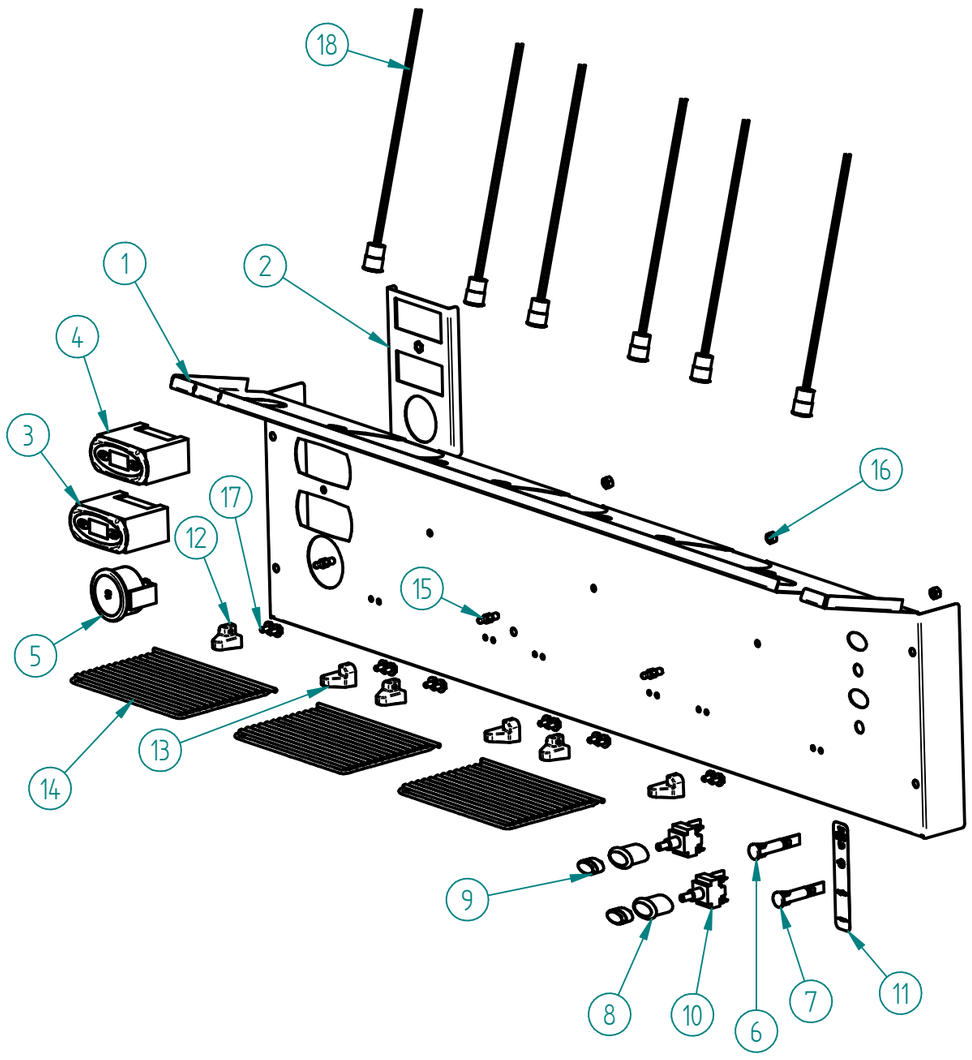

ITEM Nº	CÓDIGO	DESIGNAÇÃO	DESIGNATION	QUANT.
1	7.0.008.0273	PAINEL FRONTAL GRELHA ARAME COMPASS 3 TC TURBO STEAM	FRONT PANEL COMPASS 3 TC TURBO STEAM	1
2	7.0.007.0033	SUPORTE MANOMETRO COMPASS	COMPASS GAUGE SUPPORT	1
3	4.0.000.0948	TERMOPID 3 TEMP.	TERMOPID 3 TEMP.	1
4	4.0.000.0947	TERMOPID 1 TEMP.	TERMOPID 1 TEMP.	1
5	5.0.000.0391-A	MANOMETRO 0-16BAR	PRESSURE GAUGE 0-16BAR	1
6	4.0.025.0130	SINALIZADOR VERDE Ø10MM TERM. MACHO	GREEN LED Ø10MM	1
7	4.0.025.0135	SINALIZADOR LARANJA Ø10MM TERM. MACHO	ORANGE LED Ø10MM	1
8	4.0.000.0503	CAIXA ELIPSE D16	BOX D16 ELIPSE	2
9	4.0.000.0507	TASTO ELIPSE D16	SWITCH KEY D16	2
10	4.0.000.0513	INTERRUPTOR BIPOLAR E0070	TWO POLES SWITCH E0070	2
11	4.0.007.0064	AUTOCOLANTE INTERRUPTOR GERAL COMPASS	MAIN SWITCH SELF-STICKING PLATE COMPASS	1
12	4.0.016.7018-A	SUPORTE ESQUERDO GRELHA CHAVENAS ARAME	WIRE CUP LEFT SUPPORT	3
13	4.0.016.7017-A	SUPORTE DIREITO GRELHA CHAVENAS ARAME	WIRE CUP RIGHT SUPPORT	3
14	4.0.016.7015-A	GRELHA CHAVENAS ARAME CARAVEL/COMPASS/QUADRANT	WIRE COFFEE TRAY GRID	3
15	4.0.016.7020	FIXADOR GRELHA CHAVENAS ARAME	FIXER PIN	3
16	4.2.000.9172	PORCA M5 ZINC. DIN934	M5 NUT ZINC. DIN934	3
17	4.2.000.9126	PARAFUSO ROSCA PLASTICO K40X8 ZINC.	SCREW K40X8	12
18	4.0.007.0041-A	LED BRANCO ROSCADO Ø13MM 12V C/ CABO	FITTING WHITE LED Ø13MM 12V W/ CABLE	6

MÁQUINAS GRUPOS BAIXOS / *LOW CUPS MACHINES*

71 - PM-PAINEL FRONTAL COMPASS 3 DB

71 - FRONT PANEL COMPASS 3 DB

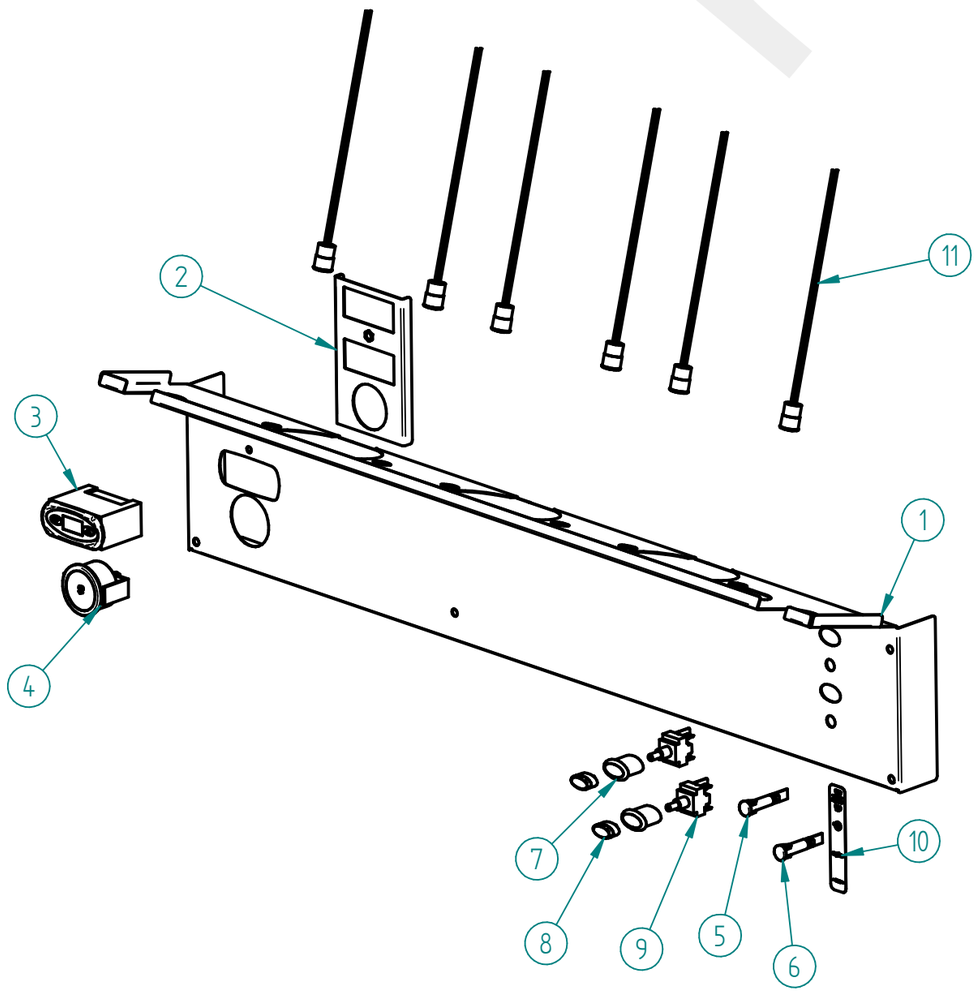

ITEM Nº	CÓDIGO	DESIGNAÇÃO	DESIGNATION	QUANT.
1	7.0.008.0072-A	PAINEL FRONTAL COMPASS 3 DB NV	FRONT PANEL COMPASS 3 DB NV	1
2	7.0.007.0033	SUPORTE MANOMETRO COMPASS	COMPASS GAUGE SUPPORT	1
3	4.0.000.0948	TERMOPID 3 TEMP.	TERMOPID 3 TEMP.	1
4	5.0.000.0391-A	MANOMETRO 0-16BAR	PRESSURE GAUGE 0-16BAR	1
5	4.0.025.0130	SINALIZADOR VERDE Ø10MM TERM. MACHO	GREEN LED Ø10MM	1
6	4.0.025.0135	SINALIZADOR LARANJA Ø10MM TERM. MACHO	ORANGE LED Ø10MM	1
7	4.0.000.0503	CAIXA ELIPSE D16	BOX D16 ELIPSE	2
8	4.0.000.0507	TASTO ELIPSE D16	SWITCH KEY D16	2
9	4.0.000.0513	INTERRUPTOR BIPOLAR E0070	TWO POLES SWITCH E0070	2
10	4.0.007.0064	AUTOCOLANTE INTERRUPTOR GERAL COMPASS	MAIN SWITCH SELF-STICKING PLATE COMPASS	1
11	4.0.007.0041-A	LED BRANCO ROSCADO Ø13MM 12V C/ CABO	FITTING WHITE LED Ø13MM 12V W/ CABLE	6

restoranu

MÁQ. CAFÉ COMPASS 3 DB

ESPRESSO COFFEE MACHINE COMPASS 3 DB

72 - 7.0.007.0105-A - TORNEIRA AGUA COMPASS

72 - WATER TAP COMPASS

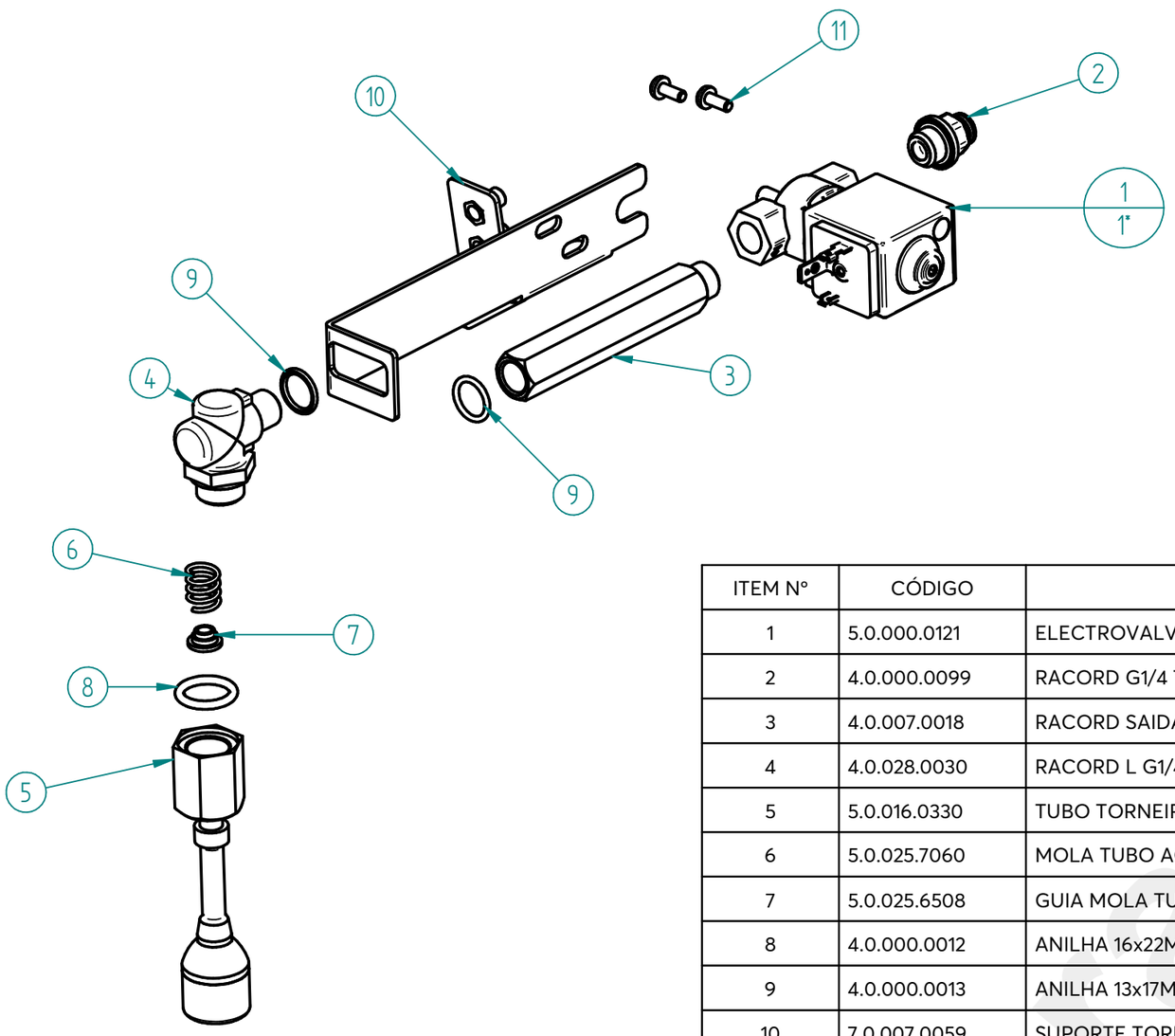

ITEM Nº	CÓDIGO	DESIGNAÇÃO	DESIGNATION	QUANT.
1	5.0.000.0121	ELECTROVALVULA 2 VIAS 220-240V/50HZ-G1/4F-G1/4F	2 WAY SOL.VALVE 220-240V/50HZ-G1/4F-G1/4F	1
2	4.0.000.0099	RACORD G1/4 TUBO ø6	FITTING G1/4 - Ø6 PIPE	1
3	4.0.007.0018	RACORD SAIDA ELECT. TORN. AGUA COMPASS	3 WAY 230V SOLENOID EXIT RACORD	1
4	4.0.028.0030	RACORD L G1/4-G3/8 - TUBO TORN. AGUA	KNEE G1/4-G3/8 - WATER TAP TUBE	1
5	5.0.016.0330	TUBO TORNEIRA AGUA ATLANTIC (CONJ.)	WATER TAP TUBE ASS.	1
6	5.0.025.7060	MOLA TUBO AGUA/VAPOR TORN. EVOL.	SPRING TAP	1
7	5.0.025.6508	GUIA MOLA TUBO AGUA/VAPOR TORN. EVOL.	GUIDE BUSH	1
8	4.0.000.0012	ANILHA 16x22MM (G3/8) COBRE	GASKET G3/8 CU	1
9	4.0.000.0013	ANILHA 13x17MM (G1/4) COBRE	GASKET G1/4 CU	2
10	7.0.007.0059	SUPORTE TORNEIRA AGUA COMPASS	SUPPORT WATER TAP COMPASS	1
11	4.2.000.9055	PARAFUSO CAB. PH M4X10 ZINC. DIN7985	ZINC-PLATED PHILLIPS HEAD SCREW M4X10	2

restoranu

MODELO 208-240V/60HZ / *MODEL 208-240V/60HZ*

72 - 7.0.007.0106 - TORNEIRA AGUA 60HZ COMPASS

72 - WATER TAP 60HZ COMPASS

ITEM Nº	CÓDIGO	DESIGNAÇÃO	DESIGNATION	QUANT.
1*	5.0.000.0117	ELECTROVALVULA 2 VIAS 220-240V/60HZ-G1/4F-G1/4F	2 WAY SOL.VALVE 220-240V/60HZ-G1/4F-G1/4F	1

MÁQ. CAFÉ COMPASS 3 DB

ESPRESSO COFFEE MACHINE COMPASS 3 DB

OPCIONAL / *OPTIONAL*

72 - 7.0.007.0107- TORNEIRA AGUA MISTURADA COMPASS

72 - MIX WATER TAP COMPASS

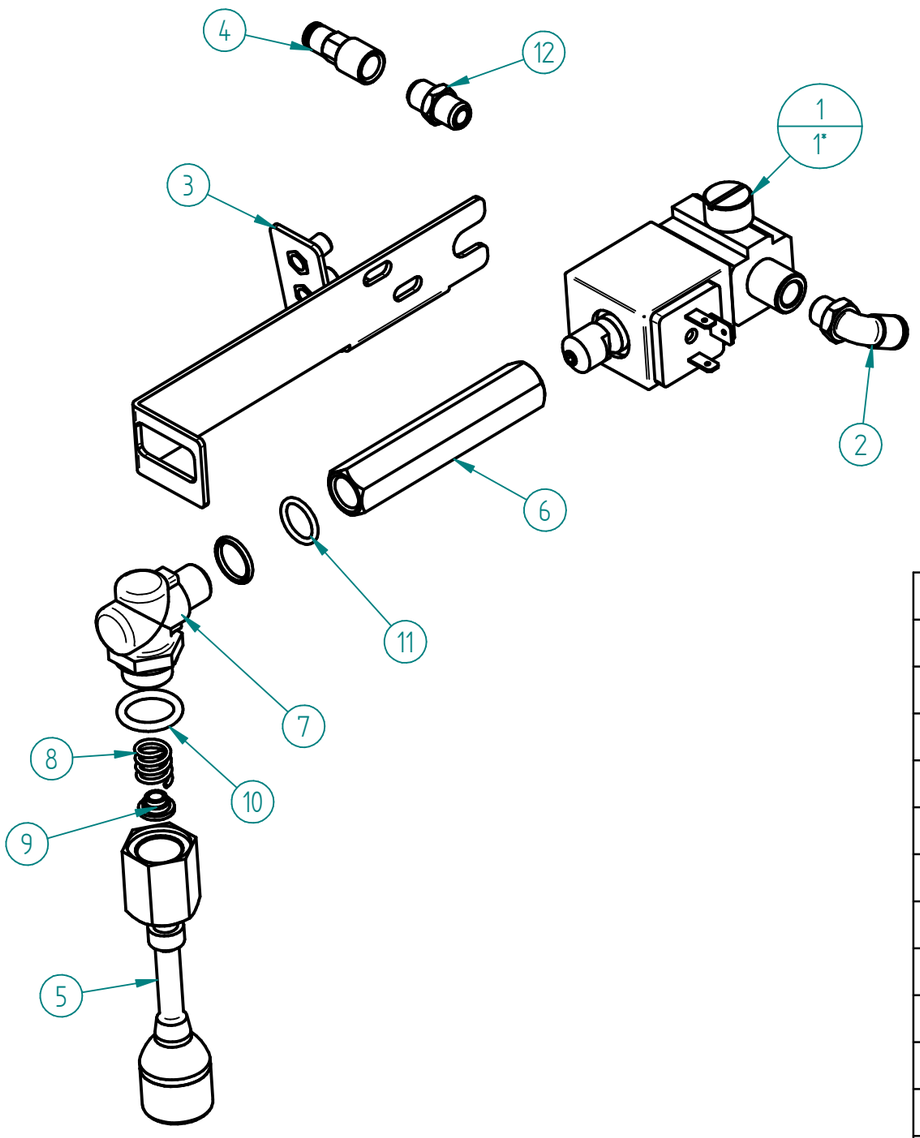

ITEM Nº	CÓDIGO	DESIGNAÇÃO	DESIGNATION	QUANT.
1	4.0.028.0017	ELECTROVALVULA 3 VIAS 230V MISTURADORA	3 WAY 230V SOLENOID MIXER	1
2	4.0.000.0108	RACORD L G1/8 TUBO TEFLON ø6	ø6 G1/8 TEFLON TUBE L RACORD	1
3	7.0.007.0059	SUPORTE TORNEIRA AGUA COMPASS	SUPPORT WATER TAP COMPASS	1
4	4.0.000.0101	RACORD G1/8F TUBO TEFLON ø4	ø4 G1/8F TEFLON TUBE RACORD	1
5	5.0.016.0330	TUBO TORNEIRA AGUA ATLANTIC (CONJ.)	WATER TAP TUBE ASS.	1
6	4.0.028.0018	RACORD SAIDA ELECT. 3 VIAS 230V MIST.	3 WAY 230V SOLENOID EXIT RACORD	1
7	4.0.028.0030	RACORD L G1/4-G3/8 - TUBO TORN. AGUA	KNEE G1/4-G3/8 - WATER TAP TUBE	1
8	5.0.025.7060	MOLA TUBO AGUA/VAPOR TORN. EVOL.	SPRING TAP	1
9	5.0.025.6508	GUIA MOLA TUBO AGUA/VAPOR TORN. EVOL.	GUIDE BUSH	1
10	4.0.000.0012	ANILHA 16x22MM (G3/8) COBRE	GASKET G3/8 CU	1
11	4.0.000.0013	ANILHA 13x17MM (G1/4) COBRE	GASKET G1/4 CU	2
12	5.0.000.0725	RACORD G1/8-G1/8 NIQ.	RACORD G1/8-G1/8 NIQ.	1

MODELO 208-240V/60HZ / *MODEL 208-240V/60HZ*

72 - 7.0.007.0108 - TORNEIRA AGUA MISTUR. 60HZ COMPASS

72 - MIXER WATER TAP 60HZ COMPASS

ITEM Nº	CÓDIGO	DESIGNAÇÃO	DESIGNATION	QUANT.
1*	4.0.028.0020	ELECTROVALVULA 3 VIAS 220-240V/60Hz MISTURADORA	3 WAY 220-240V/60Hz MIXER SOLENOID VALVE	1

5 - 5.0.016.0330 - TUBO TORNEIRA AGUA ATLANTIC (CONJ.)

5 - WATER TAP TUBE ASS.

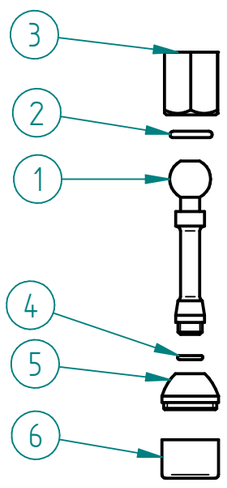

ITEM Nº	CODIGO	DESIGNAÇÃO	DESIGNATION	QUANT.
1	5.0.016.0331	TUBO TORNEIRA AGUA CROM. ATLANTIC	WATER TAP TUBE	1
2	5.0.025.0205	ORING 12,1x2,7 PORCA TUBO TORN.	ORING 12,1x2,7	1
3	5.0.016.0321	PORCA TUBO TORN. ATLANTIC	TAP TUBE NUT	1
4	5.0.000.0565	ORING 7,2X1,9 VEIO TORN. BR-03	TAP SHAFT ORING	1
5	5.0.000.0640	PONTEIRA TUBO ÁGUA	POINT OF THE WATER TUBE	1
6	5.0.000.0148	ESPALHADOR PONTEIRA ÁGUA	SPRAYER OF THE WATER POINT	1

restoranu

MÁQ. CAFÉ COMPASS 3 DB

ESPRESSO COFFEE MACHINE COMPASS 3 DB

74 - PM-PAINEL COMANDO SUPERIOR CONJ. COMPASS 3 DB TC

74 - UPPER COMMAND PANEL ASS. COMPASS 3 DB TC

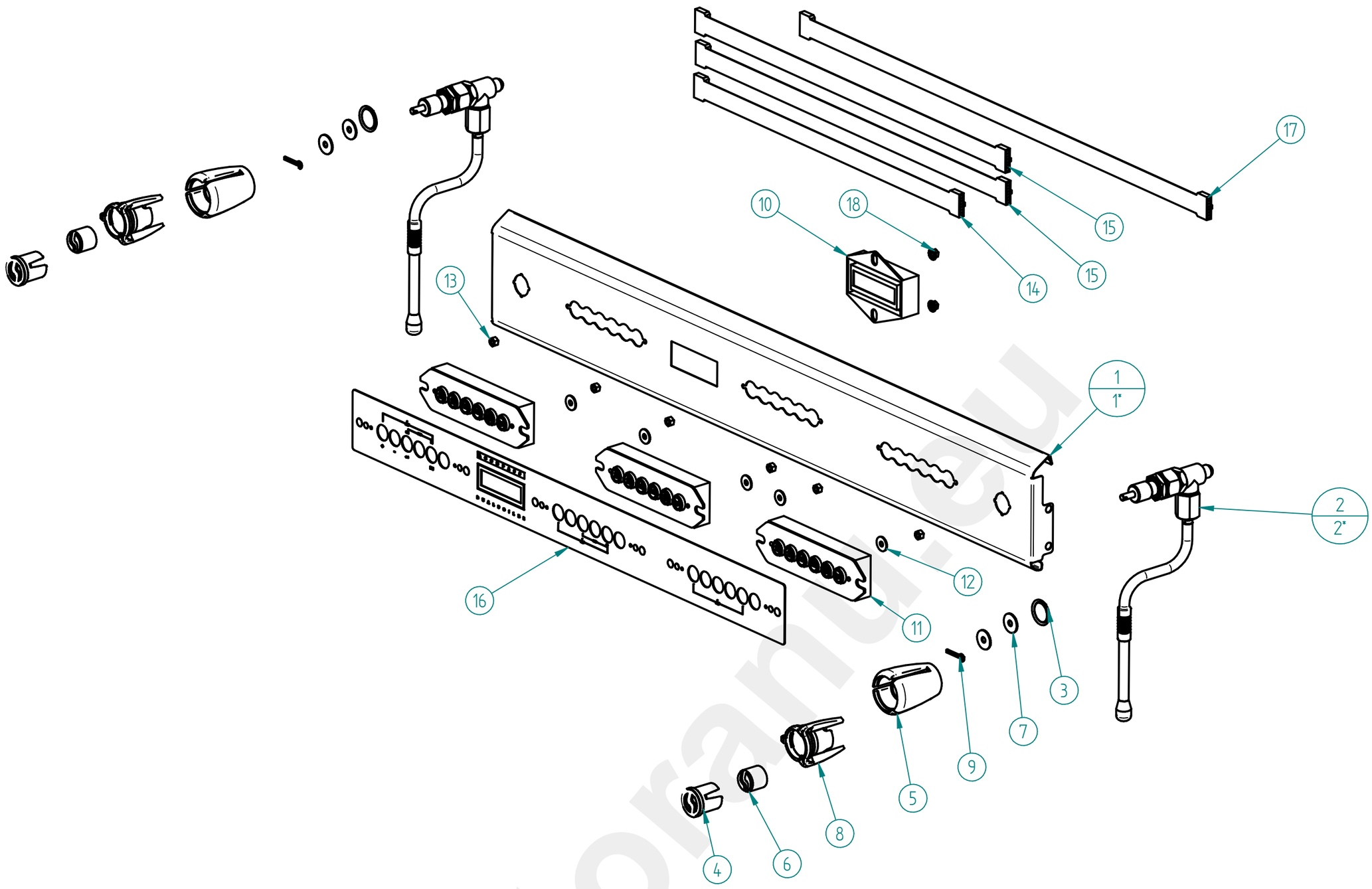

ITEM Nº	CÓDIGO	DESIGNAÇÃO	DESIGNATION	QUANT.
1	7.0.008.0055	PAINEL COMANDO SUP. COMPASS 3 DB NV2 WHITE	UPPER CONT. PANEL COMPASS 3 DB NV2 WHITE	1
2	7.0.007.0163	TORNEIRA MEIA VOLTA ECC-23 RST (CONJ. VAPOR) COMPASS	STEAM TAP ASS. ECC-23 RST COMPASS	2
3	4.0.000.0011	ANILHA 20X26MM (G1/2) COBRE	GASKET G1/2 CU	2
4	4.0.007.0131	TAMPAO MAN. TORN. RST	FILTER HOLDER HANDLE TAP	2
5	4.0.007.0126	CORPO MANIPULO TORN. MEIA VOLTA ECC-23 RST	BODY TAP KNOB RST	2
6	4.0.007.0135	SIMBOLO FIAMMA BRANCO MAN. TORN. RST	WHITE SYMBOL FIAMMA TAP KNOB RST	2
7	4.0.016.0026	ANILHA LATAO 1,3MM MAN. TORN. ECC-07	MS WASHER 1,3MM	4
8	4.0.007.0129	ANEL PRETO MAN. TORN. RST	BLACK RING TAP KNOB RST	2
9	4.0.016.0025	GOLPILHA INOX MAN. TORN. ECC-07	TAP ECC-07 LOCKER	2
10	7.0.007.0115	DISPLAY LCD 16X2 AZUL CONJ.	BLUE LCD DISPLAY 16X2 ASSEMB.	1
11	7.0.007.0109	TECLADO 6T Ø16 FIAMMA CONJ.	PUSH-BUTTON PANEL 6BTS Ø16 ASSEMB. FIAMMA	3
12	4.2.000.9164	ANILHA PLANA M5X15 ZINC. DIN9021	ZINC-PLATED M5X15 FLAT RING DIN9021	6
13	4.2.000.9172	PORCA M5 ZINC. DIN934	M5 NUT ZINC. DIN934	6
14	4.0.000.0971	CABO UNIDADE ELECTR. TECLADO 16 PIN 600MM	CABLE FOR ELECTR. UNIT KEYBOARD 16 PIN 600MM	1
15	4.0.000.0972	CABO UNIDADE ELECTR. TECLADO 16 PIN 850MM	CABLE FOR ELECTR. UNIT KEYBOARD 16 PIN 850MM	2
16	4.0.008.0060-A	PAINEL PERSONALIZADO 6T+6T+6T COMPASS 3 BLACK	COSTUMER MADE PAINEL COMPASS 3 DB	1
17	4.0.000.0973	CABO UNIDADE ELECTR. TECLADO 16 PIN 1100MM	CABLE FOR ELECTR. UNIT KEYBOARD 16 PIN 1100MM	1
18	4.2.000.9180	PORCA M5 ZINC. C/ RECART. DIN6923	M5 NUT ZINC. DIN6923	2

ITEM Nº	CÓDIGO	DESIGNAÇÃO	DESIGNATION	MOD./MODEL	QUANT.
1*	7.0.008.0056	PAINEL COMANDO SUP. COMPASS 3 NV2 BLACK	UPPER CONT. PANEL COMPASS 3 NV2 BLACK	MAQ. CAFE COMPASS 3 DB BLACK	1
2*	7.0.016.0077	TORNEIRA MEIA VOLTA ECC-23 RST (CONJ. VAPOR)	STEAM TAP ASS. ECC-23 RST (STEAM ASS.)	MAQ. CAFE COMPASS 3 DB WHITE / MAQ. CAFE COMPASS 3 DB BLACK	2

Management System ISO 9001:2015 TÜVRheinland CERTIFIED www.tuv.com ID 9108624282

www.fiamma.pt

This drawing may be altered without previous notice.
Os elementos deste desenho podem ser alterados sem aviso prévio.

MÁQ. CAFÉ COMPASS 3 DB

ESPRESSO COFFEE MACHINE COMPASS 3 DB

MÁQUINAS GRUPOS ALTOS / *TALL CUPS MACHINES*

2- 7.0.007.0163 - TORNEIRA MEIA VOLTA ECC-23 RST (CONJ. VAPOR) COMPASS

2 - STEAM TAP ECC-23 ASSEMB. COMPASS

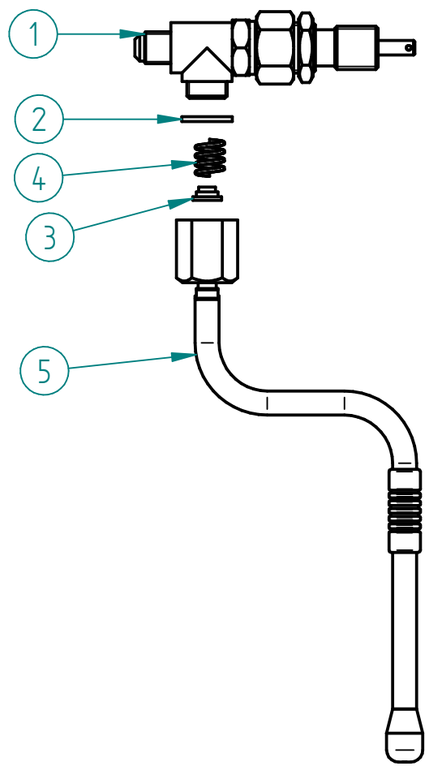

ITEM Nº	CODIGO	DESIGNAÇÃO	DESIGNATION	QUANT.
1	4.0.007.0124	TORNEIRA MEIA VOLTA ECC-23 RST	ECC-23 TAP RST	1
2	5.0.025.1386	JUNTA TEFLON 21X16,8X2	TEFLON GASKET	1
3	5.0.025.6508	GUIA MOLA TUBO AGUA/VAPOR TORN. EVOL.	GUIDE BUSH	1
4	5.0.025.7060	MOLA TUBO AGUA/VAPOR TORN. EVOL.	SPRING TAP	1
5	5.0.007.0320	TUBO TORNEIRA VAPOR COMPASS (CONJ.)	STEAM TAP PIPE ASSEMB. COMPASS	1

OPCIONAL / *OPTIONAL*

2 - 7.0.007.0160 - TORNEIRA MEIA VOLTA ECC-23 RST (CONJ. VAPOR) COOL TOUCH

2 - STEAM TAP ECC-23 ASSEMB. COOL TOUCH

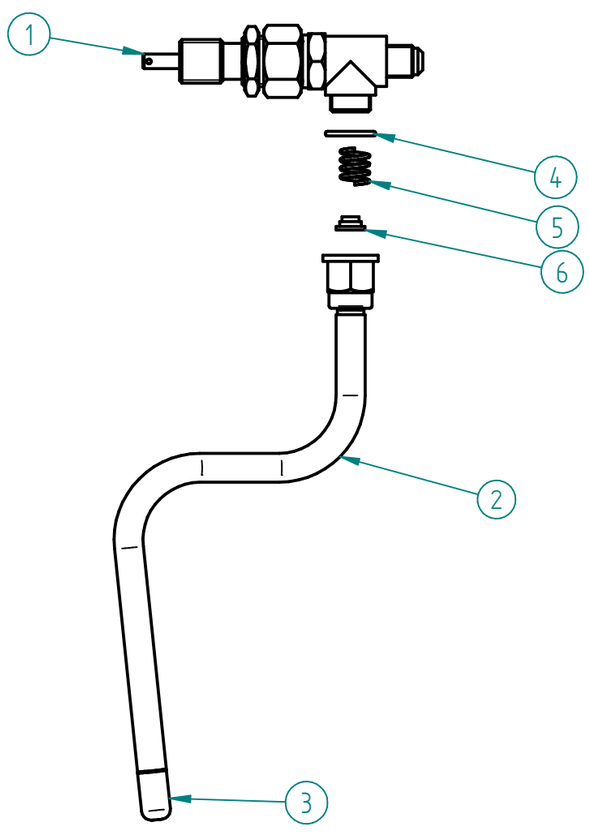

ITEM Nº	CÓDIGO	DESIGNAÇÃO	DESIGNATION	QUANT.
1	4.0.007.0124	TORNEIRA MEIA VOLTA ECC-23 RST	ECC-23 TAP RST	1
2	5.0.028.0340	TUBO TORNEIRA VAPOR COOL TOUCH (CONJ.)	COOL TOUCH STEAM TAP TUBE	1
3	5.0.028.0345	ESPALHADOR VAPOR TORN. COOL TOUCH - 3 FUROS	SPRAYER OF THE COOL TOUCH STEAM TAP - 3 HOLES	1
4	5.0.028.0342	ORING 16X2 TUBO VAPOR COOL TOUCH	ORING 16X2 COOL TOUCH STEAM TUBE	1
5	5.0.028.0344	MOLA TUBO VAPOR COOL TOUCH	COOL TOUCH STEAM TUBE SPRING	1
6	5.0.028.0343	GUIA MOLA TUBO VAPOR COOL TOUCH	COOL TOUCH STEAM TUBE SPRING GUIDE	1

2- 7.0.007.0153 -TORNEIRA ALAVANCA G1/4-G3/8 RST (CONJ. VAPOR) COMPASS

2 - STEAM TAP G1/4-G3/8 RST COMPASS

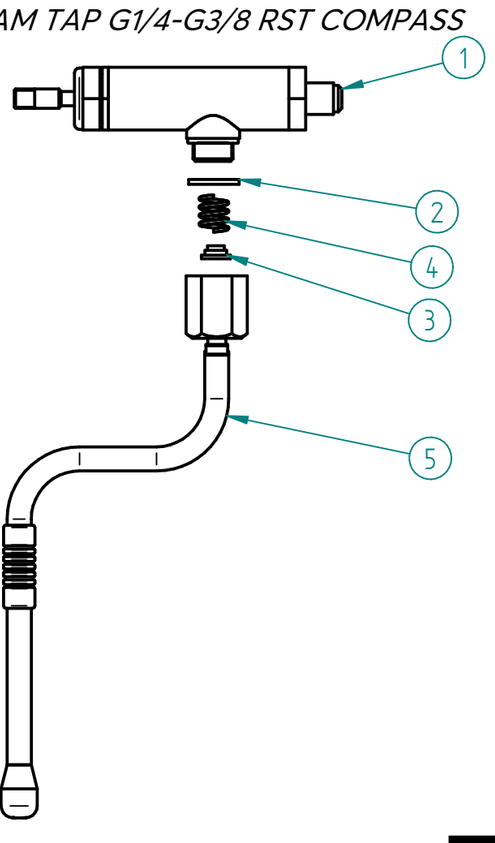

ITEM Nº	CÓDIGO	DESIGNAÇÃO	DESIGNATION	QUANT.
1	5.0.007.0010	TORNEIRA ALAVANCA G1/4-G3/8 RST	LEVER TAP G1/4-G3/8 RST	1
2	5.0.025.1386	JUNTA TEFLON 21X16,8X2	TEFLON GASKET	1
3	5.0.025.6508	GUIA MOLA TUBO AGUA/VAPOR TORN. EVOL.	GUIDE BUSH	1
4	5.0.025.7060	MOLA TUBO AGUA/VAPOR TORN. EVOL.	SPRING TAP	1
5	5.0.007.0320	TUBO TORNEIRA VAPOR COMPASS (CONJ.)	STEAM TAP PIPE ASSEMB. COMPASS	1



PEÇAS P/ ADAPTADOR MANIPULO / TAP KNOB ADAPTER PARTS

CÓDIGO	DESIGNAÇÃO	DESIGNATION	QUANT.
5.0.007.0011-A	RACORD ADAPT. TR18X4A2P-M8F TORN. ALAVANCA RST	RACORD ADAPT. LEVER TAP RST	1
5.0.007.0012	PARAFUSO SEM CAB. UMBR. M8X10 ZINC. DIN916	ZINC-PLATED SOCKET SET SCREW M8X10 DIN916	1
4.0.007.0126	CORPO MANIPULO TORN. RST	BODY TAP KNOB RST	1

Management System ISO 9001:2015
TÜVRheinland CERTIFIED
www.tuv.com ID 9108624282

www.fiamma.pt

This drawing may be altered without previous notice.
Os elementos deste desenho podem ser alterados sem aviso prévio.

MÁQ. CAFÉ COMPASS 3 DB

ESPRESSO COFFEE MACHINE COMPASS 3 DB

2 - 7.0.007.0150 -TORNEIRA ALAVANCA G1/4-G3/8 RST (CONJ. VAPOR) COOL TOUCH

2 - STEAM TAP COOL TOUCH G1/4-G3/8 RST

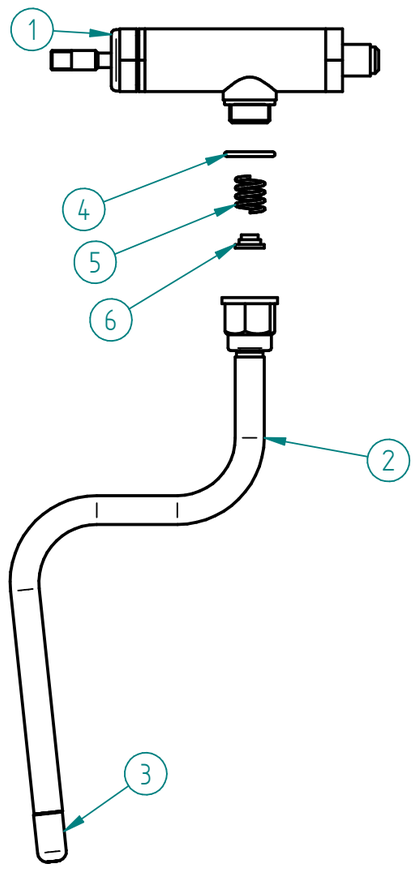

ITEM Nº	CÓDIGO	DESIGNAÇÃO	DESIGNATION	QUANT.
1	5.0.007.0010	TORNEIRA ALAVANCA G1/4-G3/8 RST	LEVER TAP G1/4-G3/8 RST	1
2	5.0.028.0340	TUBO TORNEIRA VAPOR COOL TOUCH (CONJ.)	COOL TOUCH STEAM TAP TUBE	1
3	5.0.028.0345	ESPALHADOR VAPOR TORN. COOL TOUCH - 3 FUROS	SPRAYER OF THE COOL TOUCH STEAM TAP - 3 HOLES	1
4	5.0.028.0342	ORING 16X2 TUBO VAPOR COOL TOUCH	ORING 16X2 COOL TOUCH STEAM TUBE	1
5	5.0.028.0344	MOLA TUBO VAPOR COOL TOUCH	COOL TOUCH STEAM TUBE SPRING	1
6	5.0.028.0343	GUIA MOLA TUBO VAPOR COOL TOUCH	COOL TOUCH STEAM TUBE SPRING GUIDE	1



PEÇAS P/ ADAPTADOR MANIPULO / TAP KNOB ADAPTER PARTS

CÓDIGO	DESIGNAÇÃO	DESIGNATION	QUANT.
5.0.007.0011-A	RACORD ADAPT. TR18X4A2P-M8F TORN. ALAVANCA RST	RACORD ADAPT. LEVER TAP RST	1
5.0.007.0012	PARAFUSO SEM CAB. UMBR. M8X10 ZINC. DIN916	ZINC-PLATED SOCKET SET SCREW M8X10 DIN916	1
4.0.007.0126	CORPO MANIPULO TORN. RST	BODY TAP KNOB RST	1

MÁQUINAS GRUPOS BAIXOS / *LOW CUPS MACHINES*

2 - 7.0.016.0077 - TORNEIRA MEIA VOLTA ECC-23 (CONJ. VAPOR)

2 - STEAM TAP ASS. ECC-23

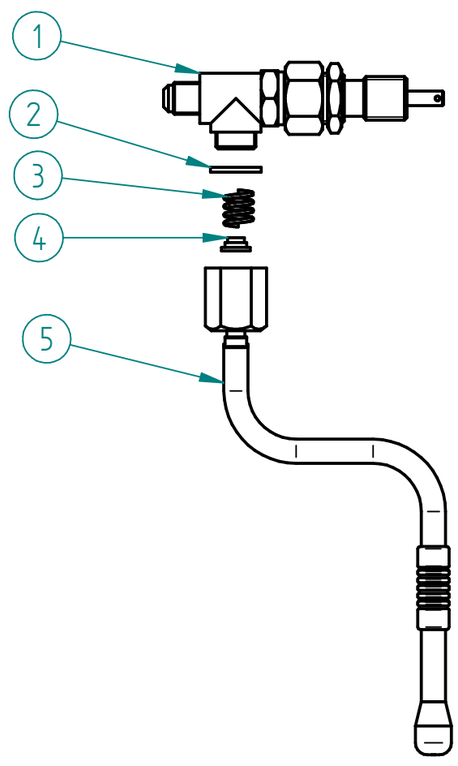

ITEM Nº	CÓDIGO	DESIGNAÇÃO	DESIGNATION	QUANT.
1	4.0.007.0124	TORNEIRA MEIA VOLTA ECC-23 RST	ECC-23 TAP RST	1
2	5.0.025.1386	JUNTA TEFLON 21X16,8X2	TEFLON GASKET	1
3	5.0.025.7060	MOLA TUBO AGUA/VAPOR TORN. EVOL.	SPRING TAP	1
4	5.0.025.6508	GUIA MOLA TUBO AGUA/VAPOR TORN. EVOL.	GUIDE BUSH	1
5	5.0.016.0320	TUBO TORNEIRA VAPOR ATLANTIC (CONJ.)	STEAM TAP TUBE ASS.	1

OPCIONAL / *OPTIONAL*

2 - 7.0.007.0161 - TORNEIRA MEIA VOLTA ECC-23 RST (CONJ. VAPOR) COOL TOUCH LC

2 - STEAM TAP COOL TOUCH LC ASS. ECC-23

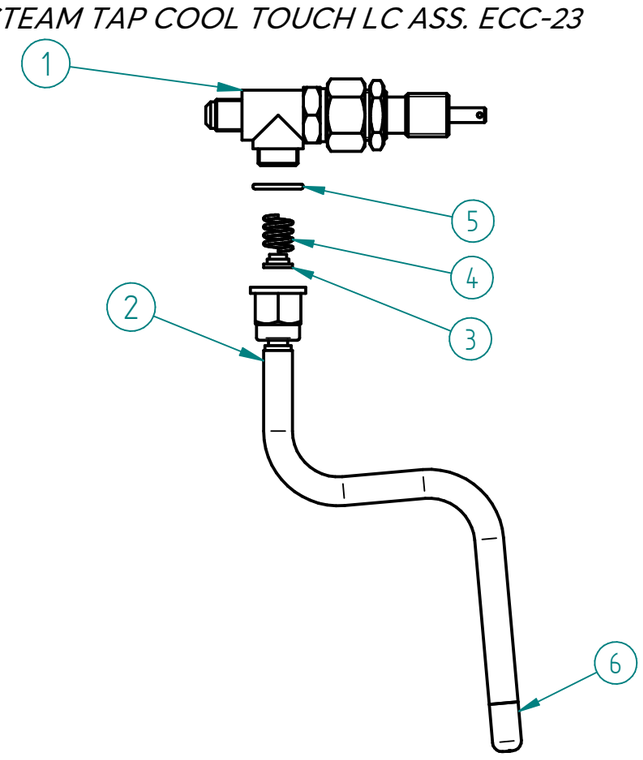

ITEM Nº	CÓDIGO	DESIGNAÇÃO	DESIGNATION	QUANT.
1	4.0.007.0124	TORNEIRA MEIA VOLTA ECC-23 RST	ECC-23 TAP RST	1
2	5.0.007.0340-A	TUBO TORNEIRA VAPOR COOL TOUCH (CONJ.) LOW CUPS	COOL TOUCH STEAM TAP TUBE	1
3	5.0.028.0343	GUIA MOLA TUBO VAPOR COOL TOUCH	COOL TOUCH STEAM TUBE SPRING GUIDE	1
4	5.0.028.0344	MOLA TUBO VAPOR COOL TOUCH	COOL TOUCH STEAM TUBE SPRING	1
5	5.0.028.0342	ORING 16X2 TUBO VAPOR COOL TOUCH	ORING 16X2 COOL TOUCH STEAM TUBE	1
6	5.0.028.0345	ESPALHADOR VAPOR TORN. COOL TOUCH - 3 FUROS	SPRAYER OF THE COOL TOUCH STEAM TAP - 3 HOLES	1

restorau.eu

MÁQ. CAFÉ COMPASS 3 DB

ESPRESSO COFFEE MACHINE COMPASS 3 DB

2 - 7.0.016.0075 -TORNEIRA ALAVANCA G1/4-G3/8 RST (CONJ. VAPOR)

2 - STEAM TAP ASS. G1/4-G3/8 RST

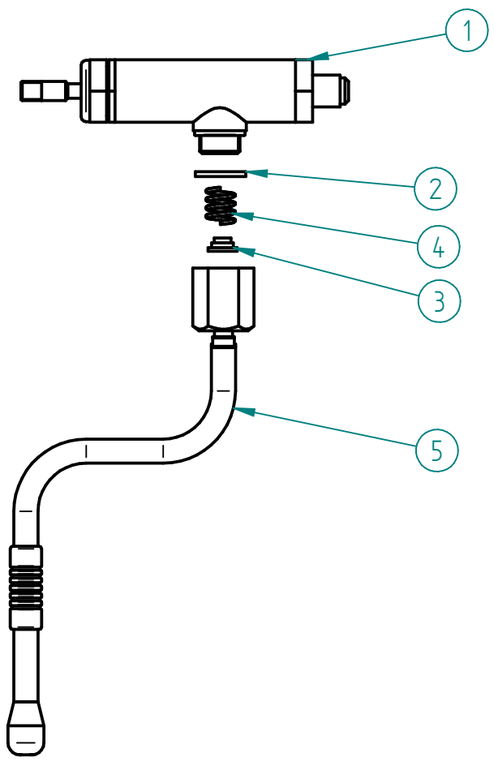

ITEM Nº	CÓDIGO	DESIGNAÇÃO	DESIGNATION	QUANT.
1	5.0.007.0010	TORNEIRA ALAVANCA G1/4-G3/8 RST	LEVER TAP G1/4-G3/8 RST	1
2	5.0.025.1386	JUNTA TEFLON 21X16,8X2	TEFLON GASKET	1
3	5.0.025.6508	GUIA MOLA TUBO AGUA/VAPOR TORN. EVOL.	GUIDE BUSH	1
4	5.0.025.7060	MOLA TUBO AGUA/VAPOR TORN. EVOL.	SPRING TAP	1
5	5.0.016.0320	TUBO TORNEIRA VAPOR ATLANTIC (CONJ.)	STEAM TAP TUBE ASS.	1

2 - 7.0.007.0151-A -TORNEIRA ALAVANCA G1/4-G3/8 RST (CONJ. VAPOR) COOL TOUCH LC

2 - STEAM TAP COOL TOUCH LC G1/4-G3/8 RST

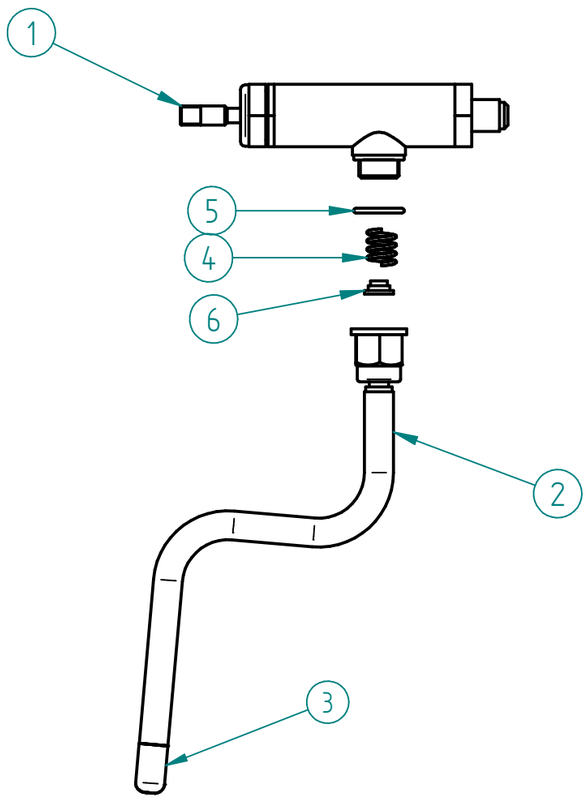

ITEM Nº	CÓDIGO	DESIGNAÇÃO	DESIGNATION	QUANT.
1	5.0.007.0010	TORNEIRA ALAVANCA G1/4-G3/8 RST	LEVER TAP G1/4-G3/8 RST	1
2	5.0.007.0340-A	TUBO TORNEIRA VAPOR COOL TOUCH (CONJ.) LOW CUPS	COOL TOUCH STEAM TAP TUBE	1
3	5.0.028.0345	ESPALHADOR VAPOR TORN. COOL TOUCH - 3 FUROS	SPRAYER OF THE COOL TOUCH STEAM TAP - 3 HOLES	1
4	5.0.028.0344	MOLA TUBO VAPOR COOL TOUCH	COOL TOUCH STEAM TUBE SPRING	1
5	5.0.028.0342	ORING 16X2 TUBO VAPOR COOL TOUCH	ORING 16X2 COOL TOUCH STEAM TUBE	1
6	5.0.028.0343	GUIA MOLA TUBO VAPOR COOL TOUCH	COOL TOUCH STEAM TUBE SPRING GUIDE	1

PEÇAS P/ ADAPTADOR MANIPULO / TAP KNOB ADAPTER PARTS

CÓDIGO	DESIGNAÇÃO	DESIGNATION	QUANT.
5.0.007.0011-A	RACORD ADAPT. TR18X4A2P-M8F TORN. ALAVANCA RST	RACORD ADAPT. LEVER TAP RST	1
5.0.007.0012	PARAFUSO SEM CAB. UMBR. M8X10 ZINC. DIN916	ZINC-PLATED SOCKET SET SCREW M8X10 DIN916	1
4.0.007.0126	CORPO MANIPULO TORN. RST	BODY TAP KNOB RST	1



restorano.eu

MÁQ. CAFÉ COMPASS 3 DB

ESPRESSO COFFEE MACHINE COMPASS 3 DB

4.0.007.0124 - TORNEIRA MEIA VOLTA ECC-23 RST

TAP ECC-23

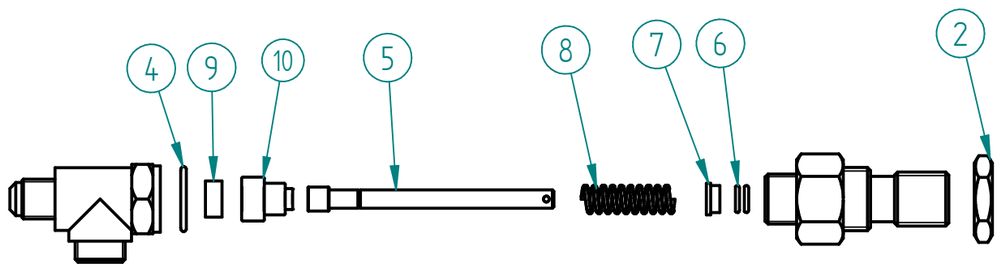

ITEM Nº	CODIGO	DESIGNAÇÃO	DESIGNATION	QUANT.
2	4.0.155.0015	PORCA G1/2 LATAO	BRASS NUT G1/2	1
4	5.0.016.0303	JUNTA COBRE 22X17X2MM TORN. ECC-07	TAP GASKET	1
5	5.0.007.0338	VEIO TORNEIRA MEIA VOLTA ECC-23 RST	TAP ECC-23 SHAFT	1
6	5.0.016.0306	ORING VEIO TORN. ECC-07	TAP SHAFT ORING	2
7	5.0.016.0305	CASQUILHO VEIO TORN. ECC-07	METAL SLEEVE	1
8	5.0.016.0302	MOLA VEIO TORN. ECC-07	TAP SHAFT SPRING	1
9	5.0.016.0301	VEDANTE BORRACHA TORN. ECC-07	TAP ECC-07 GASKET	1
10	5.0.007.0339	EXTENSÃO VEIO TORNEIRA MEIA VOLTA ECC-23 RST	TAP ECC-23 SHAFT EXTENSION	1

ACESSÓRIOS TUBOS TORNEIRA VAPOR

STEAM TAP TUBE ASS.

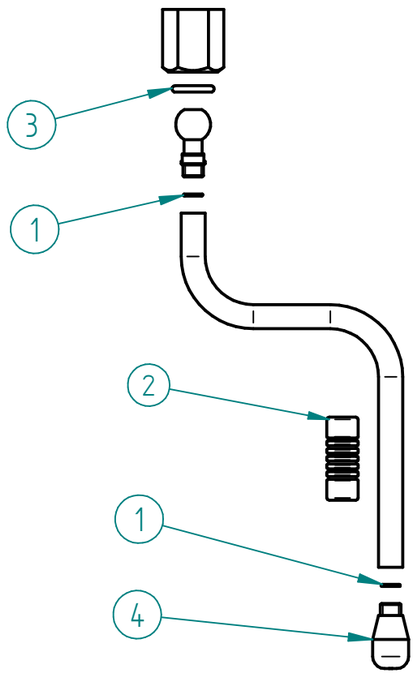

ITEM Nº	CODIGO	DESIGNAÇÃO	DESIGNATION	QUANT.
1	5.0.016.0323	ORING 6X1 TUBO VAPOR ATLANTIC	ORING 6X1	2
2	4.0.000.0814	PINÇA ISOLANTE TUBO VAPOR 10MM	INSULATING HANDGRIP 10MM	1
3	5.0.025.0205	ORING 12,1x2,7 PORCA TUBO TORN.	ORING 12,1x2,7	1
4	5.0.028.0328	ESPALHADOR VAPOR TORN. PACIFIC M8,5X0,75 - 3 FUROS	SPRAYER OF THE STEAM TAP - 3 HOLES	1

5.0.007.0010 - TORNEIRA ALAVANCA G1/4-G3/8 RST

LEVER TAP G1/4-G3/8 RST

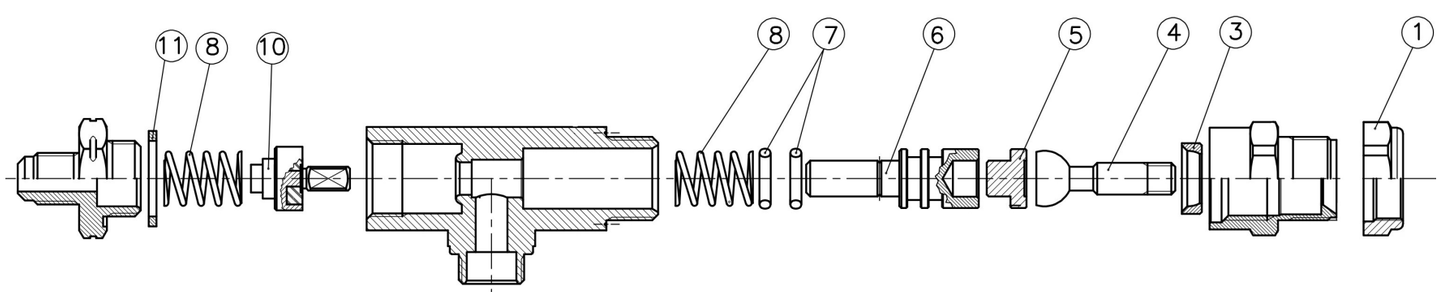

ITEM	CÓDIGO	DESIGNAÇÃO	DESIGNATION	QUANT.
1	5.0.007.0311	PORCA M21X1 CROM. TORN. ALAVANCA	NUT M21X1 CROM. LEVER TAP	1
3	5.0.007.0309	INSERTO AÇO NITRO. TORN ALAVANCA	STEEL INSERT LEVER TAP	1
4	5.0.007.0308	VEIO FRONTAL AÇO NITRO. C/ ESFERA TORN. ALAVANCA	FRONT SHAFT LEVER TAP	1
5	5.0.007.0307	CASQUILHO AÇO NITRO. TORN. ALAVANCA	METAL SLEEVE LEVER TAP	1
6	5.0.007.0305	VEIO POSTERIOR PORTA ORINGS TORN. ALAVANCA	REAR SHAFT LEVER TAP	1
7	5.0.007.0306	ORING VEIO POST. TORN. ALAVANCA	REAR SHAFT ORING LEVER TAP	2
8	5.0.007.0304	MOLA VEIO TORN. ALAVANCA	SHAFT SPRING LEVER TAP	2
10	5.0.007.0301	VALVULA ANTI-RETORNO TORN. ALAVANCA	ANTI-BACKFLOW VALVE LEVER TAP	1
11	5.0.007.0302	JUNTA TEFLON 24X19X2 TORN. ALAVANCA	TEFLON GASKET 24X19X2MM LEVER TAP	1

restoranu.eu

MÁQ. CAFÉ COMPASS 3 DB

ESPRESSO COFFEE MACHINE COMPASS 3 DB

OPCIONAL / *OPTIONAL*

7.0.007.0123 - TORNEIRA VAPOR C/ SONDA COMPASS

TURBO-STEAM COMPASS

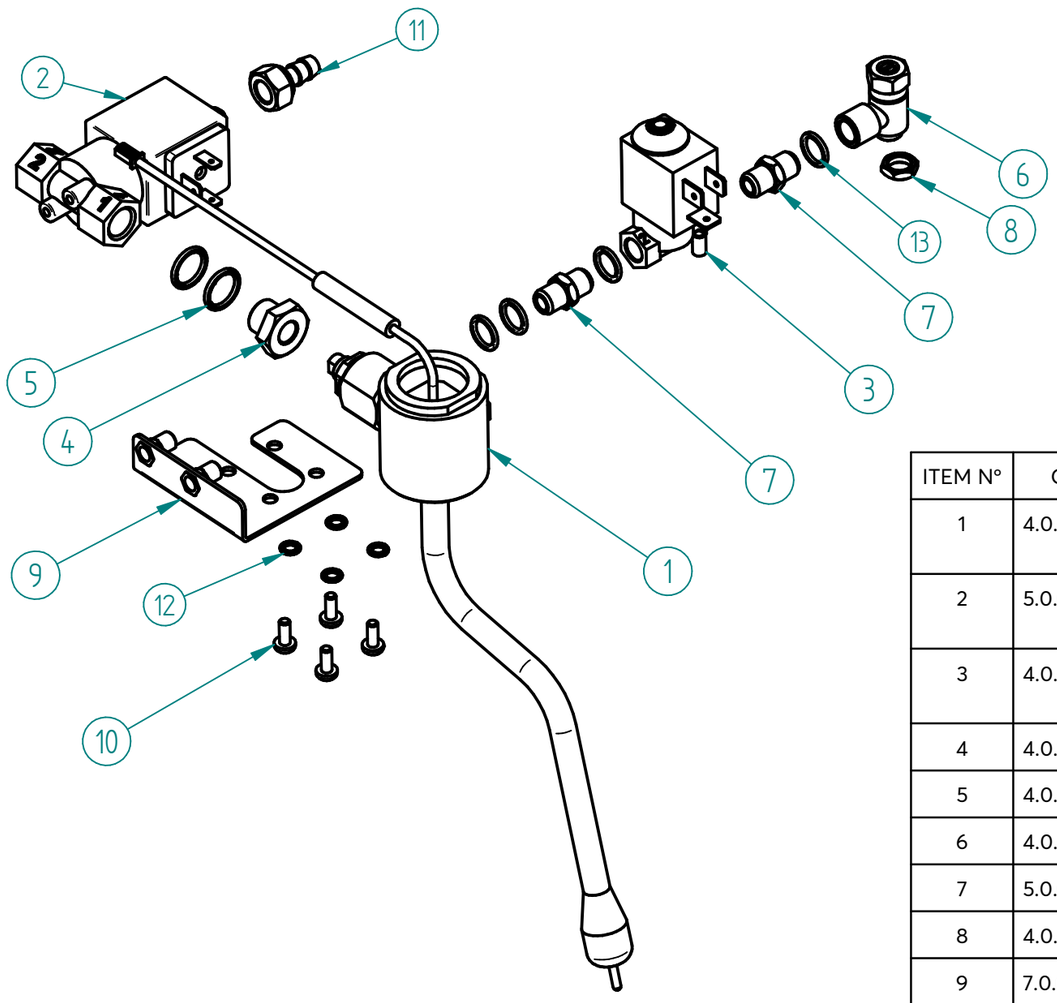

ITEM Nº	CÓDIGO	DESIGNAÇÃO	DESIGNATION	QUANT.
1	4.0.016.2040	TUBO TORNEIRA VAPOR C/ SONDA ATLANTIC TALL CUPS	STEAM TAP PIPE W/ PROBE ATLANTIC TC	1
2	5.0.000.0120	ELECTROVALVULA 3 VIAS 220-240V /50HZ-G1/4F-G1/4F-G1/8	220-240V 3 WAY ELECTROVALVE	1
3	4.0.002.0041	ELECTROVALVULA 2 VIAS 230V-ENT. AGUA MARINA	2 WAYS ELECTROVALVE	1
4	4.0.160.0060	RACORD SONDA G1/4 NIQ.	PROBE RACORD G1/4	1
5	4.0.000.0013	ANILHA 13x17MM (G1/4) COBRE	GASKET G1/4 CU	2
6	4.0.000.0124	REGULADOR AR G1/8-G1/8F	AIR REGULATER G1/8-G1/8F	1
7	5.0.000.0725	RACORD G1/8-G1/8 NIQ.	RACORD G1/8-G1/8 NIQ.	2
8	4.0.000.0046	PORCA G1/8 LATAO NIQ.	BRASS NUT G1/8	1
9	7.0.007.0205	SUPORTE TORNEIRA VAPOR C/ SONDA COMPASS	STEAM TAP SUPPORT COMPASS	1
10	4.2.000.9055	PARAFUSO CAB. PH M4X10 ZINC. DIN7985	ZINC-PLATED PHILLIPS HEAD SCREW M4X10	4
11	4.0.000.0198	RACORD DESCARGA ELECTROVALVULA	ELECTROVALVE DRAINAGE RACCORD	1
12	4.2.000.9135	ANILHA RECART. M4 ZINC. DIN6798A	ZINC-PLATED TOOTHED WASHER M4 DIN6798A	4
13	5.0.025.3193	ANILHA 10X15MM (G1/8) COBRE	COPPER WASHER 10X15MM (G1/8)	4

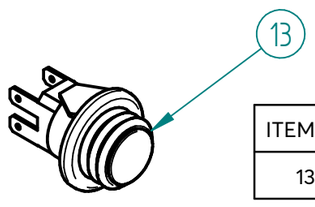

ITEM Nº	CÓDIGO	DESIGNAÇÃO	DESIGNATION	QUANT.
13	4.0.028.0086	INTERRUPTOR BIPOLAR P/ VAPOR AUTOMATICO	TWO POLES SWITCH BLUE ø20	1

77 - 7.0.007.0111 - CABO H07RN-F 5G4-1,8MT CONJ. COMPASS 3

77 - FEEDING CABLE H07RN-F 5G4-1,8MT ASS. COMPASS 3

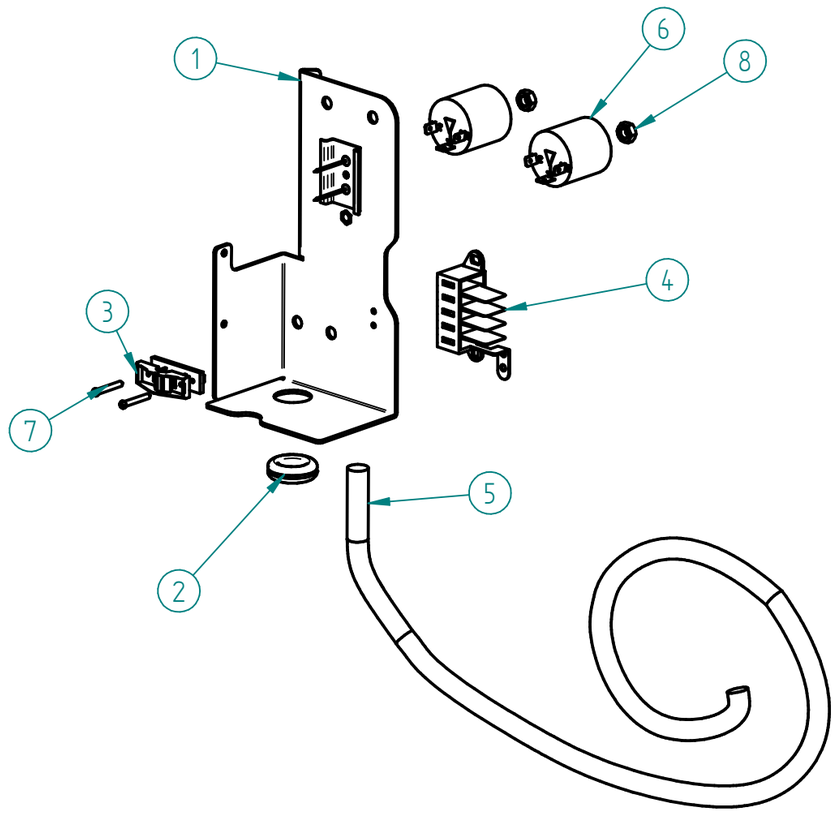

ITEM Nº	CÓDIGO	DESIGNAÇÃO	DESIGNATION	QUANT.
1	7.0.007.0028	SUPORTE CERRA CABOS COMPASS	CABLE FASTENER SUPPORT COMPASS	1
2	4.0.000.0372	PASSA FIOS P/ FURO ø25MM	WIRE PROTECTION	1
3	4.0.000.0496	CERRA CABOS PA 268	CABLE FASTENER PA 268	1
4	4.0.028.0015	LIGADOR RAPIDO 5 POLOS	FAST LINKER	1
5	4.0.028.0058	CABO H07RN-F 5G4	H07RN-F 5G4 CABLE	1
6	4.0.000.0997	FILTRO EMC MAQ. CAFE	EMC FILTER COFFEE MACHINE	2
7	4.2.000.9129	PARAFUSO ROSCA PLASTICO KB3,5X25 ZINC.	SCREW KB3,5X25	2
8	4.2.000.9174	PORCA M8 ZINC. DIN934	M8 NUT ZINC. DIN934	2
9*	4.2.000.9121	PARAFUSO CAB. PH M5X12 ZINC. DIN7985	M5X12 ZINC. PH HEAD SREW DIN 7985	1
10*	4.2.000.9103	PARAFUSO ROSCA CHAPA B3,5X9,5 NIQ. DIN7981	SCREW B3,5X9,5	2

Management System ISO 9001:2015
TÜVRheinland CERTIFIED
www.tuv.com ID 9108624282

www.fiamma.pt

This drawing may be altered without previous notice.
Os elementos deste desenho podem ser alterados sem aviso prévio.

MÁQ. CAFÉ COMPASS 3 DB

ESPRESSO COFFEE MACHINE COMPASS 3 DB

77 - 7.0.007.0114 - CABO H07RN-F 3G4-1,8MT CONJ. COMPASS 3 MN

77 - CABLE H07RN-F 3G4-1,8MT ASSEMB. COMPASS 3 MN

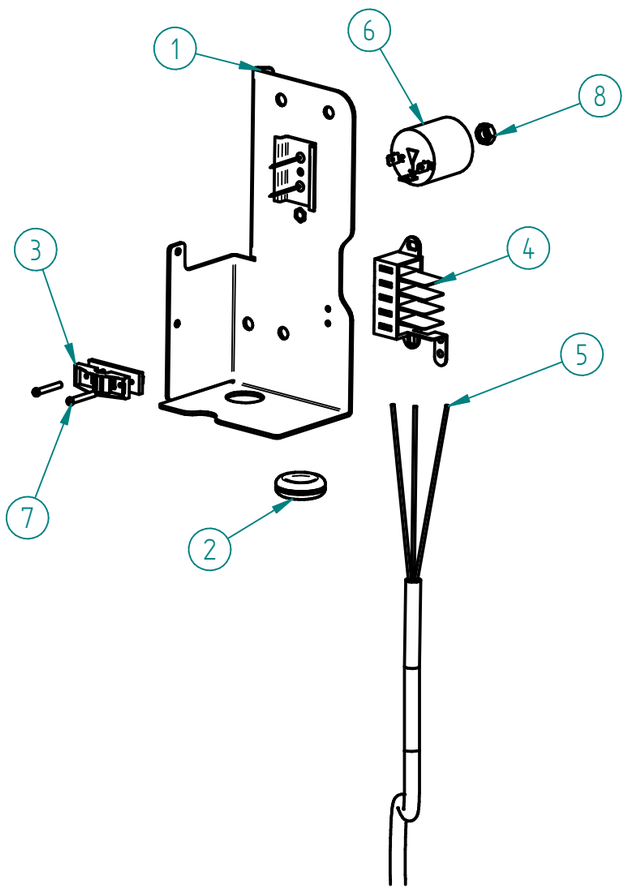

ITEM Nº	CÓDIGO	DESIGNAÇÃO	DESIGNATION	QUANT.
1	7.0.007.0028	SUPORTE CERRA CABOS COMPASS	CABLE FASTENER SUPPORT COMPASS	1
2	4.0.000.0372	PASSA FIOS P/ FURO ø25MM	WIRE PROTECTION	1
3	4.0.000.0496	CERRA CABOS PA 268	CABLE FASTENER PA 268	1
4	4.0.028.0015	LIGADOR RAPIDO 5 POLOS	FAST LINKER	1
5	4.0.065.0056	CABO H07 RN-F 3G4	CABLE H07RN-F 3G4	1
6	4.0.000.0997	FILTRO EMC MAQ. CAFE	EMC FILTER COFFEE MACHINE	1
7	4.2.000.9129	PARAFUSO ROSCA PLASTICO KB3,5X25 ZINC.	SCREW KB3,5X25	2
8	4.2.000.9174	PORCA M8 ZINC. DIN934	M8 NUT ZINC. DIN934	1
9*	4.2.000.9121	PARAFUSO CAB. PH M5X12 ZINC. DIN7985	M5X12 ZINC. PH HEAD SREW DIN 7985	1
10*	4.2.000.9103	PARAFUSO ROSCA CHAPA B3,5X9,5 NIQ. DIN7981	SCREW B3,5X9,5	2

99 - 5.0.000.0624 - PORTA FILTRO REFORÇADO CONJ. RST BRANCO - 2 BICAS

99 - FILTER HOLD. REINF. ASSEMB. RST WHITE - 2 COFFEE CUP

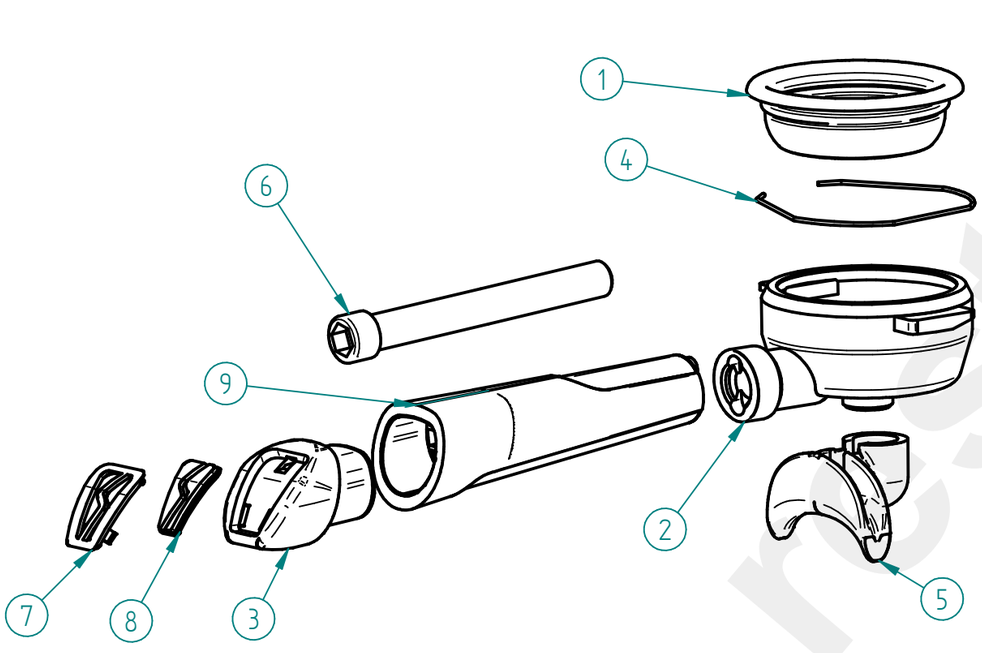

ITEM Nº	CÓDIGO	DESIGNAÇÃO	DESIGNATION	QUANT.
1	5.0.000.0173	FILTRO 2 BICAS 12 GR	2 COFFEES FILTER 12 GR	1
2	5.0.000.0653-A	PORTA FILTRO M12 INCLIN. - REFORÇADO	FILTER HOLDER	1
3	4.0.007.0163	TAMPAO CROMADO PUNHO PORTA FILTRO RST NV	CHROME FILTER HOLDER HANDLE RST	1
4	5.0.000.0411	MOLA PORTA FILTRO 1,2MM	FILTER HOLDER SPRING	1
5	5.0.000.0106	DISTRIBUIDOR 2 BICAS	2 COFFEES OUTLET	1
6	4.0.007.0149	PARAFUSO UMBR. M12X100 ZINC. DIN912	CYLIND. HEAD SCREW W/ HEX. SOCKET M12X100 ZINC. DIN912	1
7	4.0.007.0166	INSERTO TAMPAO PUNHO PORTA FILTRO RST NV	INSERT FILTER HOLDER HANDLE RST	1
8	4.0.007.0170	SIMBOLO FIAMMA BRANCO PUNHO PORTA FILTRO RST NV	WHITE SYMBOL FIAMMA FILTER HOLDER HANDLE RST	1
9	4.0.007.0160-A	PUNHO PORTA FILTRO RST NV	FILTER HOLDER HANDLE RST NV	1

100 - 5.0.000.0621-A - PORTA FILTRO REFORÇADO CONJ. RST BRANCO - 1 BICA

100 - FILTER HOLD. REINF. ASSEMB. RST WHITE - 1 COFFEE CUP

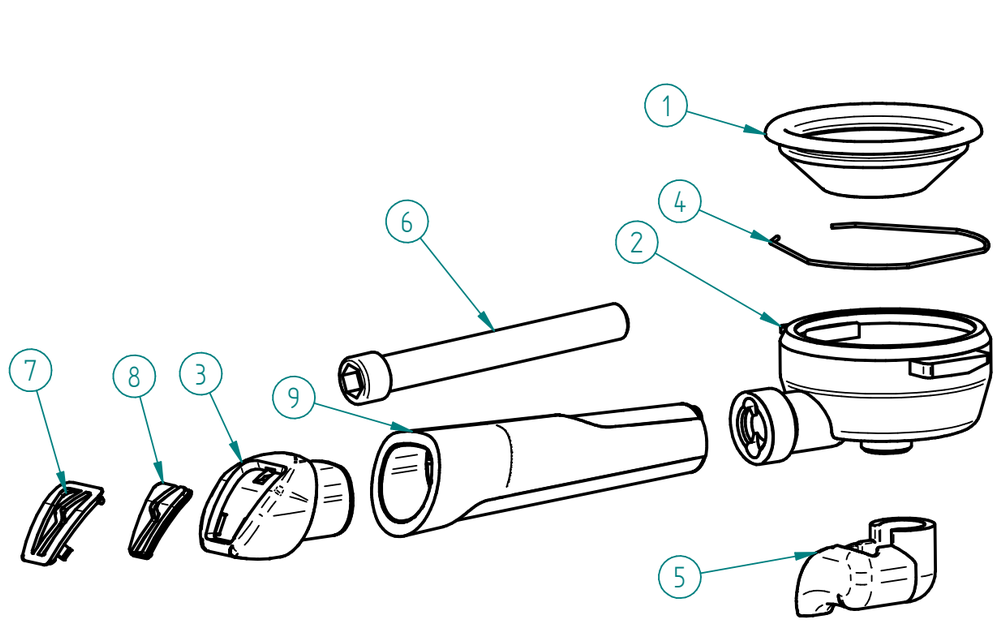

ITEM Nº	CÓDIGO	DESIGNAÇÃO	DESIGNATION	QUANT.
1	5.0.000.0162	FILTRO 1 BICA 6GR NV	6GR 1 CUP FILTER	1
2	5.0.000.0653-A	PORTA FILTRO M12 INCLIN. - REFORÇADO	FILTER HOLDER	1
3	4.0.007.0163	TAMPAO CROMADO PUNHO PORTA FILTRO RST NV	CHROME FILTER HOLDER HANDLE RST	1
4	5.0.000.0411	MOLA PORTA FILTRO 1,2MM	FILTER HOLDER SPRING	1
5	5.0.000.0111	DISTRIBUIDOR 1 BICA EM L	L SPOUT SPECIAL	1
6	4.0.007.0149	PARAFUSO UMBR. M12X100 ZINC. DIN912	CYLIND. HEAD SCREW W/ HEX. SOCKET M12X100 ZINC. DIN912	1
7	4.0.007.0166	INSERTO TAMPAO PUNHO PORTA FILTRO RST NV	INSERT FILTER HOLDER HANDLE RST	1
8	4.0.007.0170	SIMBOLO FIAMMA BRANCO PUNHO PORTA FILTRO RST NV	WHITE SYMBOL FIAMMA FILTER HOLDER HANDLE RST	1
9	4.0.007.0160-A	PUNHO PORTA FILTRO RST NV	FILTER HOLDER HANDLE RST NV	1

restoranu.eu

Management System ISO 9001:2015 TÜVRheinland CERTIFIED www.tuv.com ID 9108624282

www.fiamma.pt

This drawing may be altered without previous notice.
Os elementos deste desenho podem ser alterados sem aviso prévio.

MB „Restoranų įranga". Vito Gerulaičio 1-59, LT-08200 Vilnius · +370 614 89888 · info@restoranu.eu · www.restoranu.eu

ESQUEMA ELECTRICO

Electric Scheme

MÁQ. CAFÉ COMPASS 3 DB

ESPRESSO COFFEE MACHINE COMPASS 3 DB

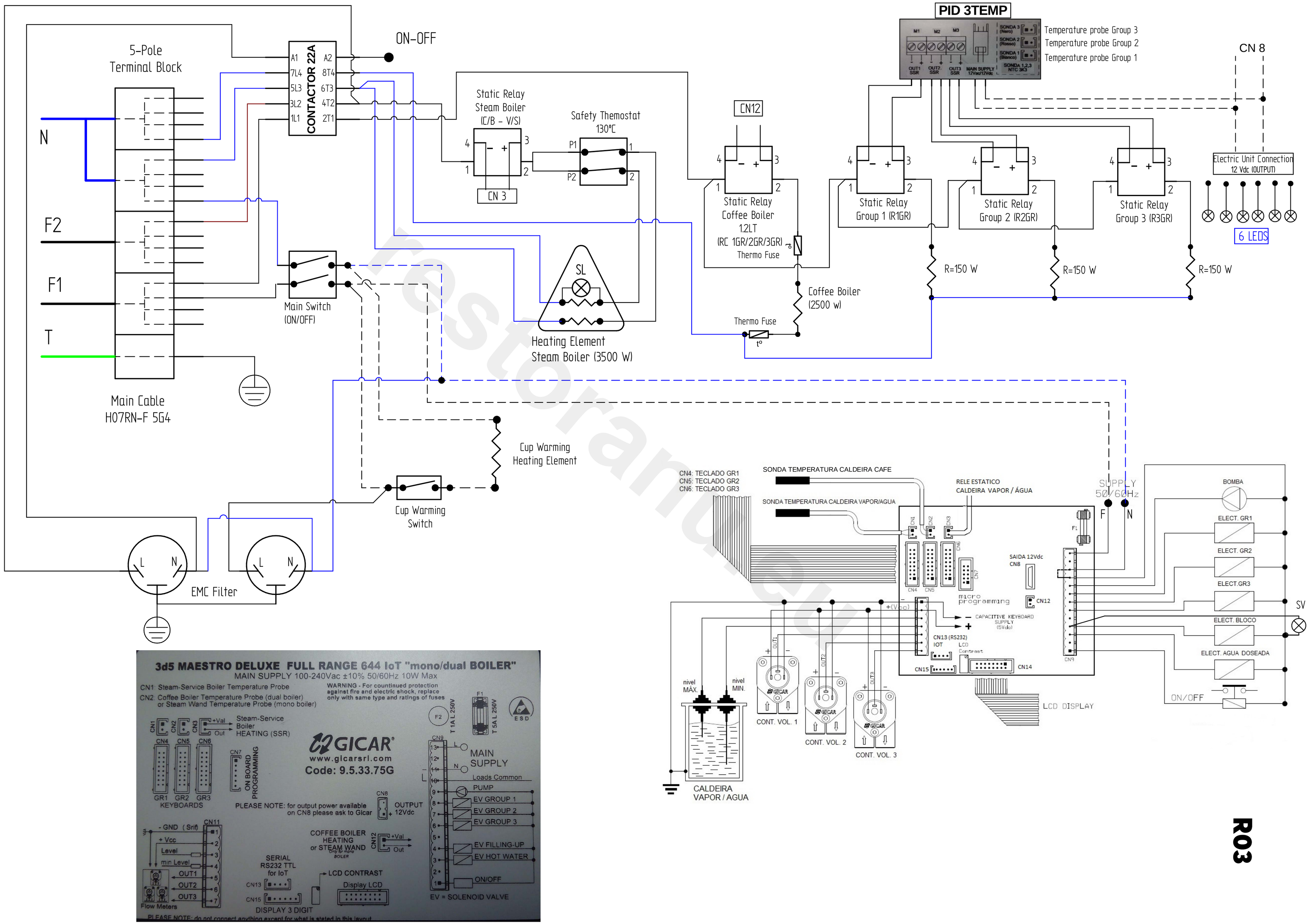

R03

This drawing may be altered without previous notice.
Os elementos deste desenho podem ser alterados sem aviso prévio.

www.fiamma.pt

fiamma RST TÜVRheinland CERTIFIED Management System ISO 9001:2015