SINCE 1977

R01

Explosion Drawing
Desenho de Explosão



NAU CLASSICA

ESPRESSO COFFEE MACHINE • MÁQUINA CAFÉ ESPRESSO

NAU CLASSICA BLACK
NAU CLASSICA GREEN
NAU CLASSICA PRO BLACK
NAU CLASSICA PRO GREEN

20210317

www.fiamma.pt

This drawing may be altered without previous notice.
Os elementos deste desenho podem ser alterados sem aviso prévio.

MÁQ. CAFÉ NAU CLASSICA

ESPRESSO COFFEE MACHINE NAU CLASSICA

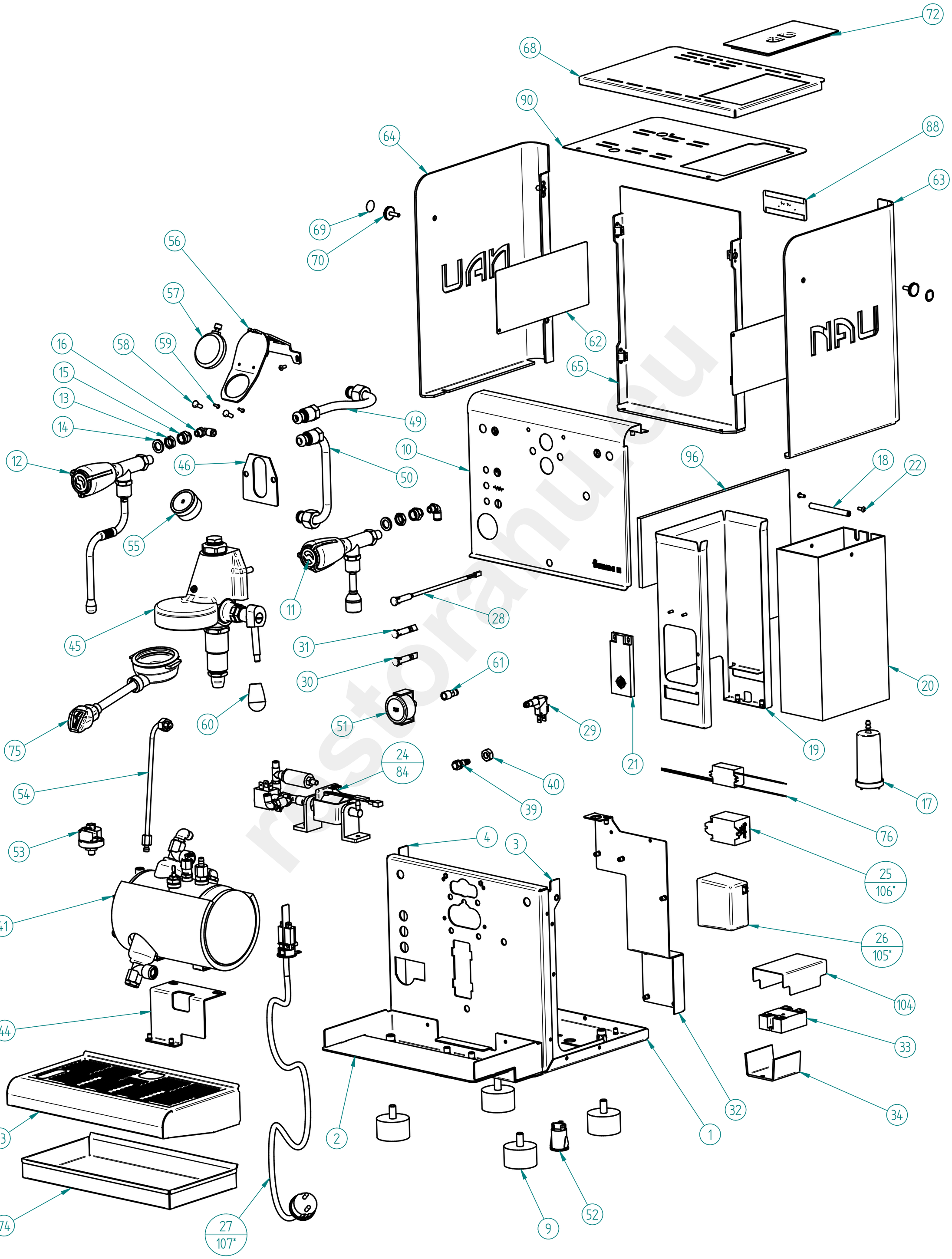

fiamma
RST
TÜVRheinland CERTIFIED
Management System ISO 9001:2015
www.tuv.com ID 9108624282
www.fiamma.pt
This drawing may be altered without previous notice.
Os elementos deste desenho podem ser alterados sem aviso prévio.

MÁQ. CAFÉ NAU CLASSICA

ESPRESSO COFFEE MACHINE NAU CLASSICA

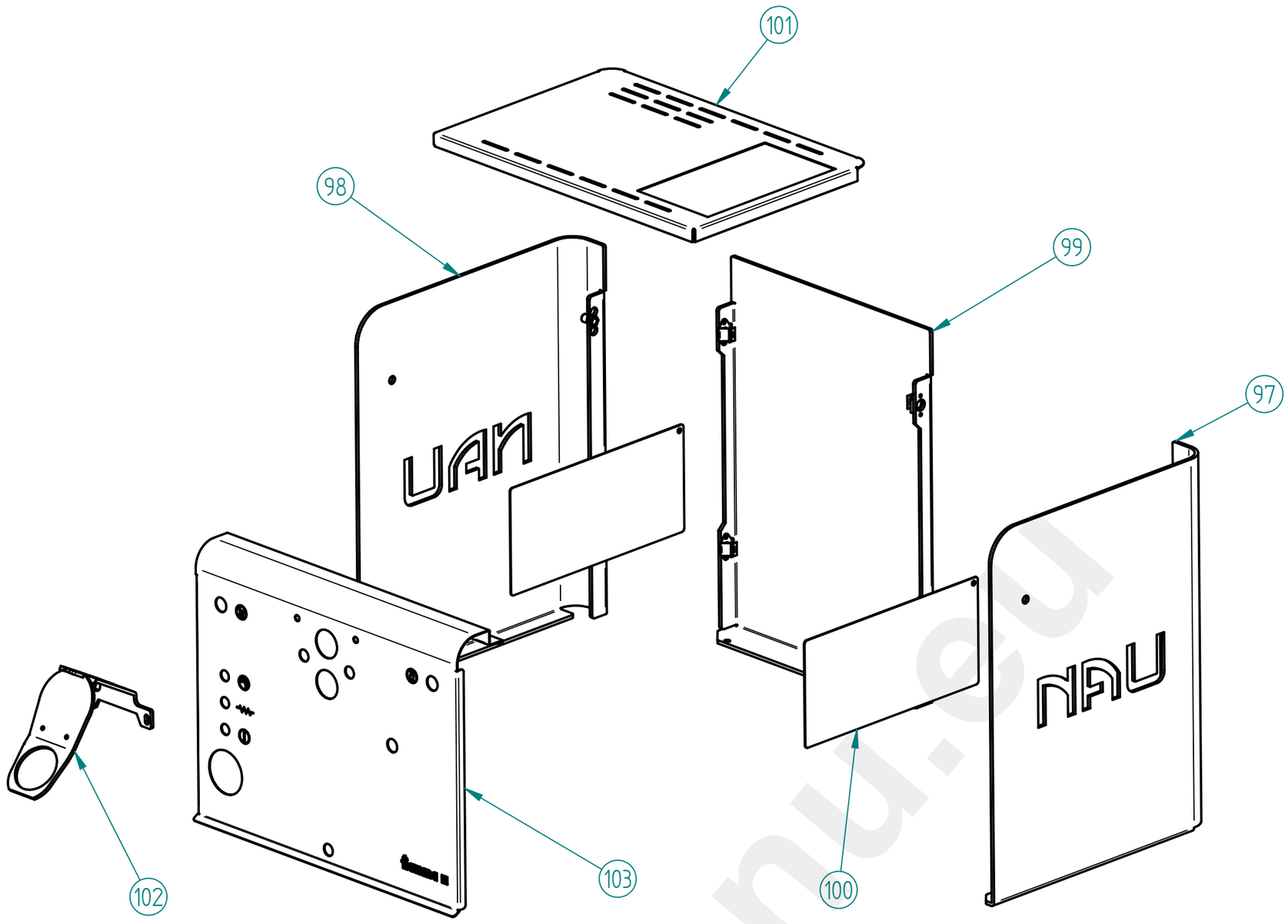

EXCLUSIVO MODELOS NAU CLASSICA GREEN / NAU CLASSICA PRO GREEN

EXCLUSIVE NAU CLASSICA GREEN / NAU CLASSICA PRO GREEN MODELS

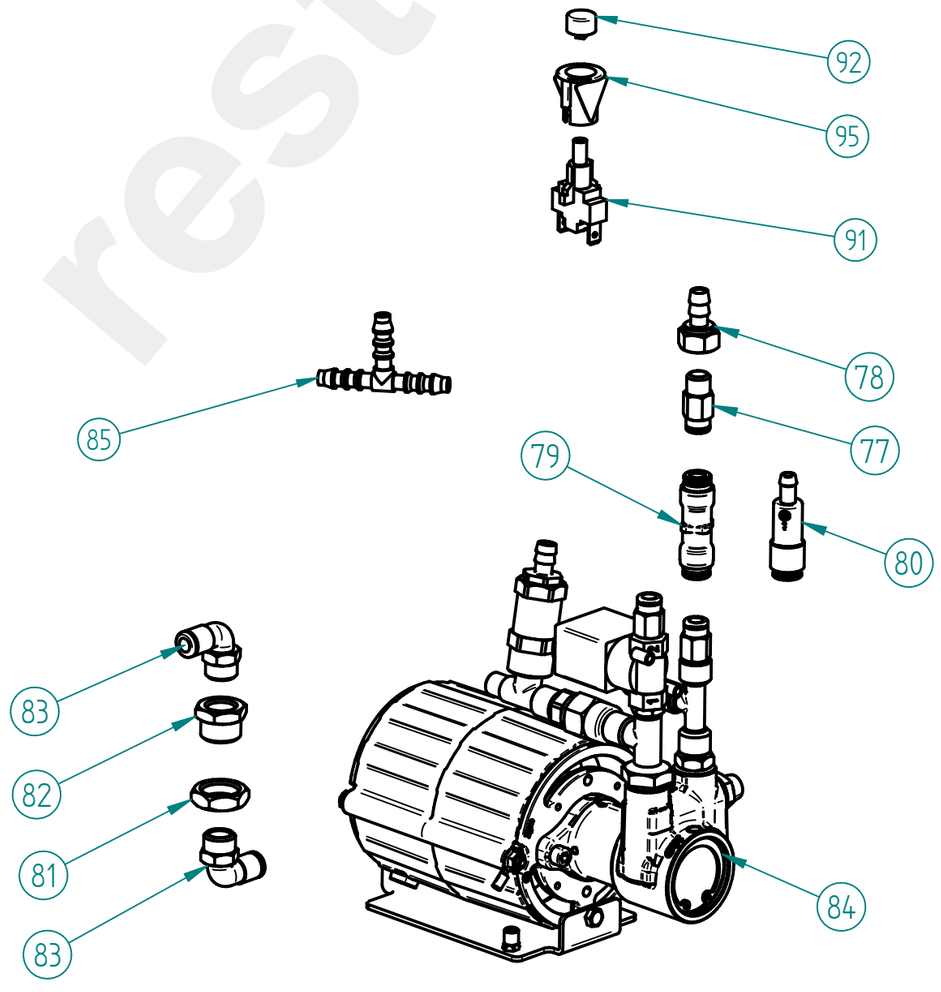

EXCLUSIVO MODELOS NAU CLASSICA PRO BLACK / NAU CLASSICA PRO GREEN

EXCLUSIVE NAU CLASSICA PRO BLACK / NAU CLASSICA PRO GREEN MODELS

restoranu.eu

MÁQ. CAFÉ NAU CLASSICA

ESPRESSO COFFEE MACHINE NAU CLASSICA

LISTA DE COMPONENTES E ACESSÓRIOS

Spare parts list

ITEM Nº	CÓDIGO	DESIGNAÇÃO	DESIGNATION	QUANT.
1	7.0.014.0000-A	CHASSI NAU	OUTER CASING NAU	1
2	7.0.014.0007	BASE TABULEIRO INFERIOR NAU	FRAMEWORK LOWER TRAY NAU	1
3	7.0.014.0001	REFORÇO LATERAL DIR. NAU	RIGHT SIDE REINFORCEMENT NAU	1
4	7.0.014.0003	REFORÇO LATERAL ESQ. NAU	LEFT SIDE REINFORCEMENT NAU	1
9	4.0.000.0800	PE MAQ. CAFE BORRACHA	COFFE MACHINE RUBBER FOOT	4
10	7.0.014.0200	PAINEL FRONTAL NAU CLASSICA BLACK C/ GRAVAÇAO	FRONT PANEL NAU CLASSICA BLACK	1
11	PRE-MONTAGEM	TORNEIRA AGUA CONJ. NAU	WATER TAP ASS. NAU	1
12	PRE-MONTAGEM	TORNEIRA VAPOR CONJ. NAU	STEAM TAP ASS. NAU	1
13	4.0.160.0062	PORCA G1/4 LATAO NIQ.	NIQ. NUT G1/4	2
14	4.0.085.0006	ANILHA RECART. M12 ZINC. DIN6798A	ZINC-PLATED TOOTHED WASHER M12 DIN6798A	2
15	5.0.000.0717	RACORD G1/4F-G1/8F	RACORD G1/4F-G1/8F NIQ.	2
16	4.0.000.0108	RACORD L G1/8 TUBO TEFLON ø6	ø6 G1/8 TEFLON TUBE L RACORD	2
17	4.0.001.1025	FILTRO AGUA MARINA CV DI & MINIBAR NV	WATER FILTER	1
18	4.0.042.0036	VEIO DEPOSITO AGUA VELA	VELA WATER TANK SHAFT	1
19	7.0.014.0005-A	BLINDAGEM/APOIO DEPOSITO AGUA NAU	OUTER CASING WATER CONTAINER NAU	1
20	4.0.014.0000	DEPOSITO AGUA 3LT NV NAU	WATER DEPOSIT 3LT NV NAU	1
21	4.0.000.0985	DETECTOR NIVEL CAPAC. GICAR	LEVEL REGULATOR GICAR	1
22	4.2.000.9619	PARAFUSO CAB. OVAL UMBR. M4X10 INOX	S/STEEL CYLIND. HEAD SCREW W/ HEX. SOCKET M4x10	7
24	7.0.014.0144	BOMBA VIBRATORIA CONJ NAU CLASSICA	VIBRATORY PUMP ASS. NAU CLASSICA	1
25	4.0.000.0995	RELE 16A / 230VAC	RELAY 16A / 230VAC	1
26	5.0.000.1048	DETECTOR NIVEL 2 SONDAS 230V P/ DEPOSITO	LEVEL DETECTOR 230V W/ DEPOSIT	1
27	4.0.075.0054	CABO SECTOR CONJ. 3G1,5 (PA 84E)	(PA 84E) 3G1,5 CABLE SET	1
28	5.0.000.1061	SINALIZADOR LED VERMELHO Ø10MM 1400MM	RED LED Ø10MM	1
29	4.0.014.0015	MICRO INTERRUPTOR C/ ROLETE	ROLLER PLUNGER SWITCH	1
30	4.0.025.0130	SINALIZADOR VERDE Ø10MM TERM. MACHO	GREEN LED Ø10MM	1
31	4.0.025.0135	SINALIZADOR LARANJA Ø10MM TERM. MACHO	ORANGE LED Ø10MM	1
32	7.0.014.0026-A	SUPORTE DETETOR NIVEL/RELE NAU CLASSICA	LEVEL DETETOR/RELE SUPPORT NAU CLASSICA	1
33	4.0.000.1003	RELE ESTATICO 25A 240VAC	25A 240VAC SOLID STATE RELAY	1
34	7.0.007.0030	DISSIPADOR RELE ESTATICO	RELAY HEATSINK	1
39	4.0.001.1010	RACORD DESCARGA GRUPO MINIBAR NV	GROUP FLUSHING FITTING	1
40	4.2.000.9175	PORCA M10 ZINC. DIN934	M10 NUT ZINC. DIN934	1
41	PRE-MONTAGEM	CALDEIRA 2LT C/ ACESS. CONJ.	2LT BOILER W/ ACESS.	1
44	7.0.014.0011	APOIO CALDEIRA 2LT NAU CLASSICA	BOILER SUPPORT NAU CLASSICA	1
45	5.0.000.0202	GRUPO B-61 ABERTURA MEC. CONJ.	B-61 GROUP MECHANICAL OPENING	1
46	5.0.000.0279	JUNTA CHASSI GR B-61	GROUP B-61 FRAMEWORK GASKET	1
49	7.0.000.0131	TUBO SUP. CART. 1ºGR (DIR.) PACIFIC	TUBE CARTRIDGE/1 GROUP PACIFIC	1
50	4.0.014.0030	TUBO INFERIOR CART.NAU CLASSICA	TUBE CARTRIDGE/2 GROUP PACIFC	1
51	5.0.000.0392-A	MANOMETRO 0-2,5BAR	PRESSURE GAUGE 0-2,5BAR	1
52	5.0.000.0238	INTERRUPTOR AMARELO (GRUPO)	YELLOW SWITCH (GROUP)	1
53	5.0.000.0686	PRESSOSTATO 16A/250V 1,3BAR G1/8	PRESSURE SWITCH 16A/250V 1,3 BAR G1/8	1
54	4.0.014.0031	TUBO BOMBA INJECTOR SUPERIOR NAU CLASSIC	TUBE VOL. DOSER/INJECTOR	1
55	5.0.000.0385	MANOMETRO 0-16BAR M6 INOX FIAMMA	PRESSURE GAUGE 0-16BAR M6 SS FIAMMA	1
56	7.0.014.0021R	SUPORTE CRONOMETRO CONJ. NAU CLASSICA RED	CHRONOMETER SUPPORT NAU CLASSICA RED	1
57	4.0.014.0040	CRONOMETRO ANALOGICO 1/5 SEG-30 MIN	ANALOGIC CHONOMETER 1/5 SEC-30 MIN	1
58	4.0.014.0042	APOIO CRONOMETRO NAU CLASSICA	CHONOMETER SUPORT NAU CLASSIC	2
59	4.2.000.9618	PARAFUSO CAB. OVAL UMBR. M3X10 INOX	SCREW M3x10	2
60	5.0.000.0240	MANIPULO M8 P/ GRUPO B-61	KNOB M8 FOR GROUP B-61	1
61	4.0.000.0101	RACORD G1/8F TUBO TEFLON ø4	ø4 G1/8F TEFLON TUBE RACORD	1
62	7.0.014.0055R	CHAPA P/ PAINEIS LATERAIS NAU RED	SHEET SIPE PANEL NAU RED	2
63	7.0.014.0040BK	PAINEL LATERAL DIR. NAU BLACK	RIGHT SIDE PANEL NAU BLACK	1
64	7.0.014.0045BK	PAINEL LATERAL ESQ. NAU BLACK	LEFT SIDE PANEL NAU BLACK	1
65	7.0.014.0050BK	PAINEL POSTERIOR NAU BLACK	REAR PANEL NAU BLACK	1
68	7.0.014.0037BK	TABULEIRO SUPERIOR NV2 NAU CLASSICA BLACK	UPPER TRAY NAU CLASSICA BLACK	1
69	4.0.016.5056	AUTOCOLANTE PAINEL LAT. ATLANTIC ECC	SIDE PANEL STICKER ATLANTIC ECC	2

Restoranu.eu

MÁQ. CAFÉ NAU CLASSICA

ESPRESSO COFFEE MACHINE NAU CLASSICA

LISTA DE COMPONENTES E ACESSÓRIOS

Spare parts list

ITEM Nº	CÓDIGO	DESIGNAÇÃO	DESIGNATION	QUANT.
70	4.0.014.0010	PARAFUSO PAINEL LAT. NAU	SCREW SIDE PANEL ATLANTIC ECC	2
72	4.0.014.0003	TAMPA DEPÓSITO ÁGUA NAU	VELA WATER TANK COVER	1
73	7.0.014.0032	GRELHA TABULEIRO INFERIOR NAU	LOWER TRAY GRID NAU	1
74	7.0.014.0030	TABULEIRO INFERIOR NAU	LOWER TRAY NAU	1
75	5.0.000.0625	PORTA FILTRO REFORÇADO CONJ. RST VERMELHO - 2 BICAS	FILTER HOLD. REINF. ASSEMB. RST RED - 1 COFFEE CUP	1
76	4.0.000.0949	TRANSFORMADOR 240VA-12VDC	TRANSFORMER 240VA-12VDC	1
77	4.0.000.0104	RACORD G1/8 TUBO TEFLON ø6	ø6 G1/8 TEFLON TUBE RACORD	1
78	4.0.000.0198	RACORD DESCARGA ELECTROVALVULA	ELECTROVALVE DRAINAGE RACCORD	1
79	5.0.042.0010	VALVULA ANTI-RETORNO TUBO Ø6	NON RETURN VALVE TUBE Ø6	1
80	5.0.014.0016	VALVULA ANTI-RETORNO TUBO SILICONE Ø9-TUBO TEFLON Ø6	NON-RETURN VALVE SILICONE TUBE Ø9- TEFLON TUBE Ø6	1
81	4.0.000.0045	PORCA G3/8 LATAO (SEXT. 21MM)	BRASS NUT G3/8 (21MM)	1
82	4.0.000.0118	RACORD G3/8-G1/4F NIQ.	G3/8-G1/4F NICKEL RACORD	1
83	4.0.000.0109	RACORD L G1/4 TUBO TEFLON ø6	ø6 G1/4 TEFLON TUBE L RACORD	2
84	7.0.014.0148	MOTOR BOMBA MICRO CONJ. NAU CLASSICA PRO	MOTOR PUMP ASS. NAU CLASSICA PRO	1
85	4.0.000.0096	CONECTOR RAPIDO T TUBO Ø6	T QUICK CONNECTOR TUBE Ø6	1
88	7.0.000.0833	ETIQUETA INOX 88X35MM FIAMMA CONJ.	FIAMMA STAINLESS STEEL LABEL	1
90	7.0.014.0035-C	BLINDAGEM SUPERIOR NAU CLASSICA	UPPER SHIELDINGUPPER NAU CLASSICA	1
91	4.0.000.0510	INTERRUPTOR UNIPOLAR	UNIPOLE SWITCH	1
92	90805.35.334	MANIPULO PRESSAO INTERRUPTOR	SWITCH PRESSURE HANDLE	1
95	90805.35.425	SUPORTE INTERRUPTOR	SWITCH SUPPORT	1
96	4.0.000.0435	ISOLAMENTO BLINDAGEM / APOIO DEPOSITO AGUA NAU	INSULATION WATER SUPORT NAU	1
97	7.0.014.0040GR	PAINEL LATERAL DIR. NAU GREEN	RIGHT SIDE PANEL NAU GREEN	1
98	7.0.014.0045GR	PAINEL LATERAL ESQ. NAU GREEN	LEFT SIDE PANEL NAU GREEN	1
99	7.0.014.0050GR	PAINEL POSTERIOR NAU GREEN	REAR PANEL NAU GREEN	1
100	7.0.014.0055GR	CHAPA P/ PAINEIS LATERAIS NAU GREEN	SHEET SIPE PANEL NAU GREEN	2
101	7.0.014.0037GR	TABULEIRO SUPERIOR NV2 NAU CLASSICA GREEN	UPPER TRAY NAU CLASSICA GREEN	1
102	7.0.014.0021W	SUPORTE CRONOMETRO CONJ. NAU CLASSICA WHITE	CHRONOMETER SUPPORT NAU CLASSICA WHITE	1
103	7.0.014.0201	PAINEL FRONTAL NAU CLASSICA GREEN C/ GRAVAÇAO	FRONT PANEL NAU CLASSICA GREEN	1
104	7.0.014.0025	BLINDAGEM RELE ESTATICO	STATIC RELAY SHIELD	1
105*	5.0.000.1049	DETECTOR NIVEL 2 SONDAS 115V P/ DEPOSITO	LEVEL DETECTOR 230V W/ DEPOSIT	1
106*	4.0.000.0996-A	RELE 16A 110VAC	RELAY 16A 110VAC	1
107*	7.0.066.0109	CABO SJTO 14AWGX3C 105° C/ FICHA EUA+CC	SJTO 14AWGX3C CABLE 105° W/ USA PLUG+CC	1

**** - COMPONENTES USADOS NAS VERSÕES 110/120V / PARTS USED IN 110/120V VERSIONS***

restored

MÁQ. CAFÉ NAU CLASSICA

ESPRESSO COFFEE MACHINE NAU CLASSICA

11 - TORNEIRA AGUA CONJ. NAU

WATER TAP ASS. NAU

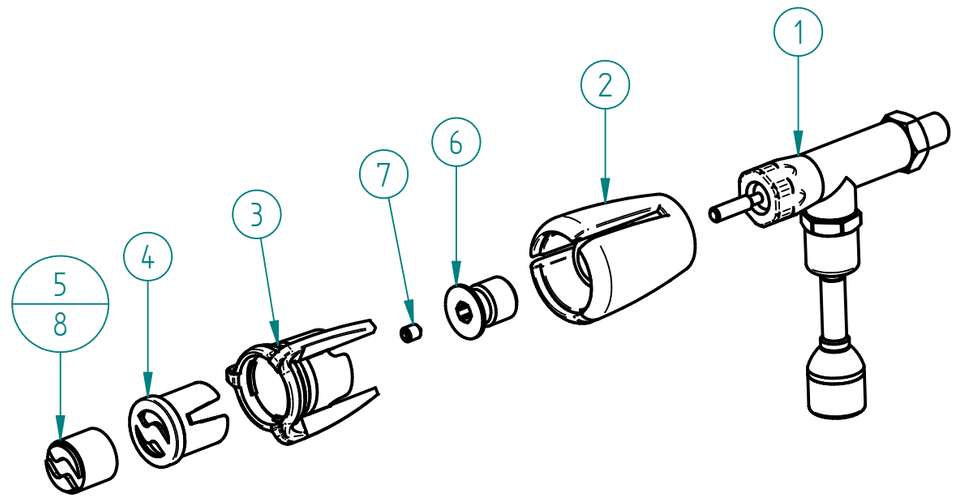

ITEM Nº	CÓDIGO	DESIGNAÇÃO	DESIGNATION	QUANT.
1	7.0.014.0130	TORNEIRA ALAVANCA MINI G1/4-G3/8 RST (CONJ. AGUA) NAU	WATER TAP ASS. NAU	1
2	4.0.007.0125	CORPO MANIPULO TORN. RST	BODY TAP KNOB RST	1
3	4.0.007.0127	ANEL CROMADO MAN. TORN. RST	CHROME RING TAP KNOB RST	1
4	4.0.007.0131	TAMPAO MAN. TORN. RST	FILTER HOLDER HANDLE TAP	1
5	4.0.007.0133	SIMBOLO FIAMMA VERMELHO MAN. TORN. RST	RED SYMBOL FIAMMA TAP KNOB RST	1
6	5.0.014.0011	RACORD ADAPT. TR18X4A2P-M6F TORN. ALAVANCA RST	RACORD ADAPT. LEVER TAP RST	1
7	4.2.000.9690	PARAFUSO SEM CAB. UMBR. M6X8 ZINC. DIN916	HEADLESS SCREW M6X8	1
8*	4.0.007.0135	SIMBOLO FIAMMA BRANCO MAN. TORN. RST	WHITE SYMBOL FIAMMA TAP KNOB RST	1

1 - 7.0.014.0130 - TORNEIRA ALAVANCA MINI G1/4-G3/8 RST (CONJ. AGUA) NAU

MINI LEVER TAP G1/4-G3/8 RST (WATER ASS.)

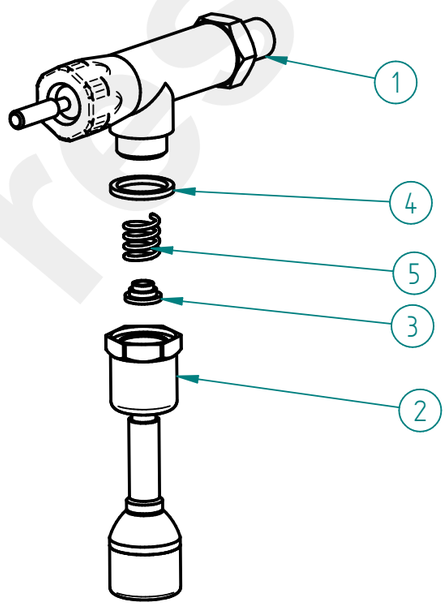

ITEM Nº	CÓDIGO	DESIGNAÇÃO	DESIGNATION	QUANT.
1	5.0.014.0010	TORNEIRA ALAVANCA MINI G1/4-G3/8 CROM. RST	MINI LEVER TAP G1/4-G3/8 CROM. RST	1
2	5.0.037.0330	TUBO TORNEIRA AGUA INOX ASTROLAB (CONJ.)	WATER TAP PIPE ASSEMB. ASTROLAB	1
3	5.0.025.6508	GUIA MOLA TUBO AGUA/VAPOR TORN. EVOL.	GUIDE BUSH	1
4	5.0.025.1386	JUNTA TEFLON 21X16,8X2	TEFLON GASKET	1
5	5.0.025.7060	MOLA TUBO AGUA/VAPOR TORN. EVOL.	SPRING TAP	1

restoranu

MÁQ. CAFÉ NAU CLASSICA

ESPRESSO COFFEE MACHINE NAU CLASSICA

12 - TORNEIRA VAPOR CONJ. NAU

STEAM TAP ASS. NAU

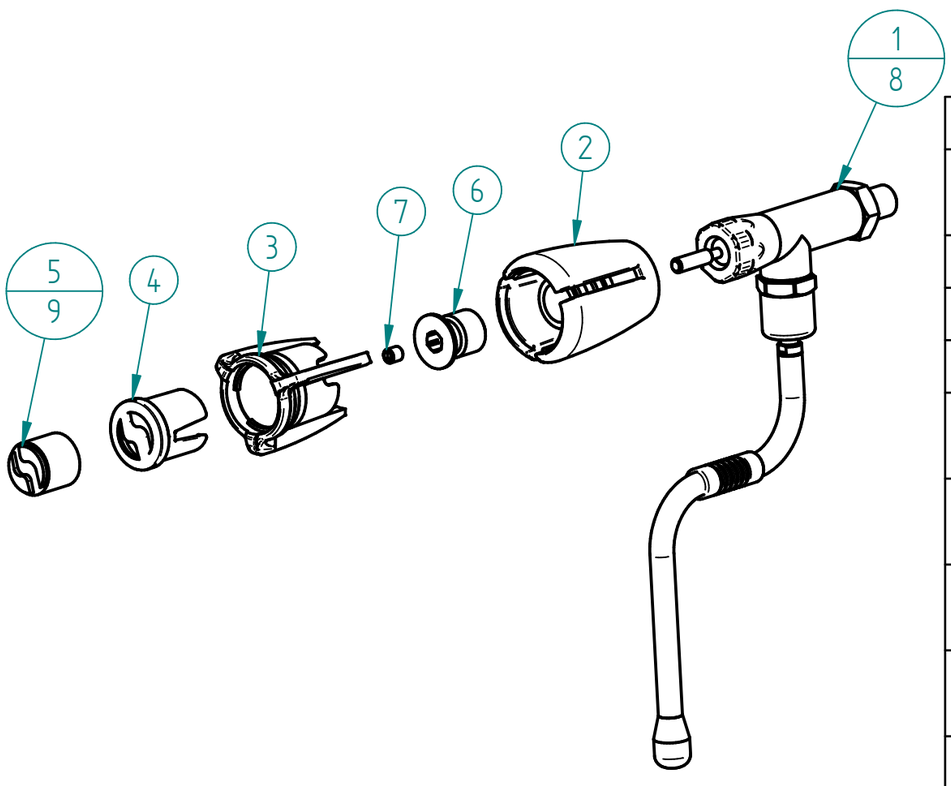

ITEM Nº	CÓDIGO	DESIGNAÇÃO	DESIGNATION	QUANT.
1	7.0.014.0132	TORNEIRA ALAVANCA MINI G1/4-G3/8 RST (CONJ. VAPOR) NAU	STEAM TAP ASS. NAU	1
2	4.0.007.0125	CORPO MANIPULO TORN. RST	BODY TAP KNOB RST	1
3	4.0.007.0127	ANEL CROMADO MAN. TORN. RST	CHROME RING TAP KNOB RST	1
4	4.0.007.0131	TAMPAO MAN. TORN. RST	FILTER HOLDER HANDLE TAP	1
5	4.0.007.0133	SIMBOLO FIAMMA VERMELHO MAN. TORN. RST	RED SYMBOL FIAMMA TAP KNOB RST	1
6	5.0.014.0011	RACORD ADAPT. TR18X4A2P-M6F TORN. ALAVANCA RST	RACORD ADAPT. LEVER TAP RST	1
7	4.2.000.9690	PARAFUSO SEM CAB. UMBR. M6X8 ZINC. DIN916	HEADLESS SCREW M6X8	1
8*	7.0.014.0133-A	TORNEIRA ALAVANCA MINI G1/4-G3/8 RST(CONJ. VAPOR) COOL TOUCH	STEAM TAP ASS. NAU	1
9*	4.0.007.0135	SIMBOLO FIAMMA BRANCO MAN. TORN. RST	WHITE SYMBOL FIAMMA TAP KNOB RST	1

1 - 7.0.014.0132 - TORNEIRA ALAVANCA MINI G1/4-G3/8 RST (CONJ. VAPOR)

MINI LEVER TAP G1/4-G3/8 RST (STEAM ASS.)

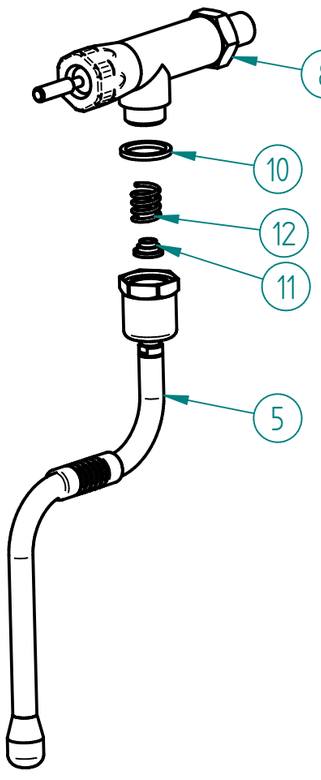

ITEM Nº	CÓDIGO	DESIGNAÇÃO	DESIGNATION	QUANT.
5	5.0.014.0320	TUBO TORNEIRA VAPOR NAU (CONJ.)	STEAM TAP TUBE NAU ASS.	1
8	5.0.014.0010	TORNEIRA ALAVANCA MINI G1/4-G3/8 CROM. RST	MINI LEVER TAP G1/4-G3/8 CROM. RST	1
10	5.0.025.1386	JUNTA TEFLON 21X16,8X2	TEFLON GASKET	1
11	5.0.025.6508	GUIA MOLA TUBO AGUA/VAPOR TORN. EVOL.	GUIDE BUSH	1
12	5.0.025.7060	MOLA TUBO AGUA/VAPOR TORN. EVOL.	SPRING TAP	1

OPCIONAL / *OPTIONAL*

8 - 7.0.014.0133-A - TORNEIRA ALAVANCA MINI G1/4-G3/8 RST (CONJ. VAPOR) COOL TOUCH

MINI LEVER TAP G1/4-G3/8 RST (STEAM ASS.) COOL TOUCH

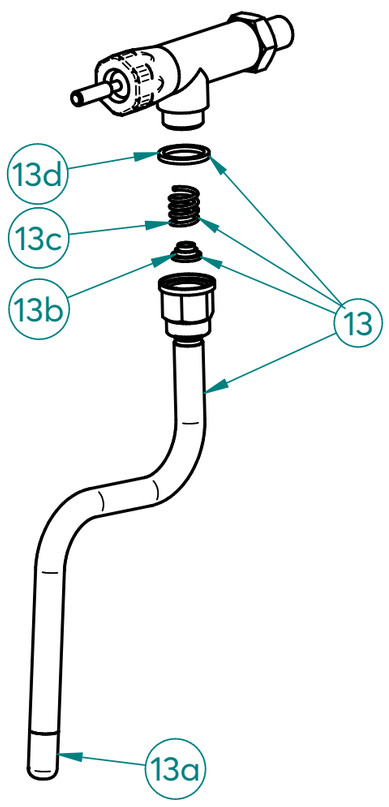

ITEM Nº	CÓDIGO	DESIGNAÇÃO	DESIGNATION	QUANT.
13	5.0.007.0340-A	TUBO TORNEIRA VAPOR COOL TOUCH (CONJ.) LOW CUPS	COOL TOUCH STEAM TAP TUBE	1
13a	5.0.028.0345	ESPALHADOR VAPOR TORN. COOL TOUCH - 3 FUROS	SPRAYER OF THE STEAM TAP	1
13b	5.0.028.0343	GUIA MOLA TUBO VAPOR COOL TOUCH	COOL TOUCH STEAM TUBE SPRING GUIDE	1
13c	5.0.028.0344	MOLA TUBO VAPOR COOL TOUCH	COOL TOUCH STEAM TUBE SPRING	1
13d	5.0.028.0342	ORING 16X2 TUBO VAPOR COOL TOUCH	ORING 16X2 COOL TOUCH STEAM TUBE	1

restonaru.eu

MÁQ. CAFÉ NAU CLASSICA

ESPRESSO COFFEE MACHINE NAU CLASSICA

8 - 5.0.014.0010 - TORNEIRA ALAVANCA MINI G1/4-G3/8 CROM. RST

MINI LEVER TAP G1/4-G3/8 CROM. RST

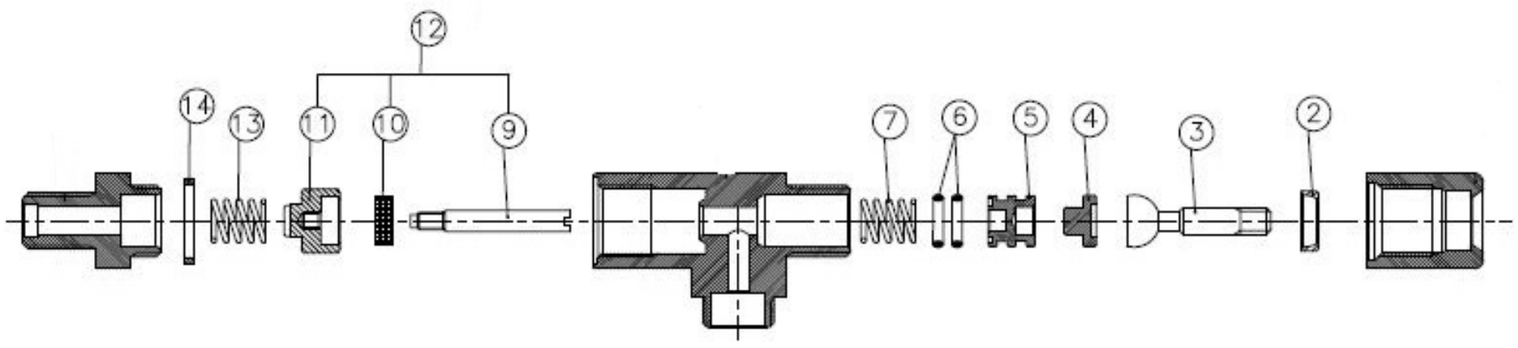

ITEM	CÓDIGO	DESIGNAÇÃO	DESIGNATION	QUANT.
2	5.0.014.0309	INSERTO AÇO NITRO. TORN ALAVANCA MINI	STEEL INSERT MINI LEVER TAP	1
3	5.0.014.0308	VEIO FRONTAL AÇO NITRO. C/ ESFERA TORN. ALAVANCA MINI	FRONT SHAFT MINI LEVER TAP	1
4	5.0.014.0307	CASQUILHO AÇO NITRO. TORN. ALAVANCA MINI	METAL SLEEVE MINI LEVER TAP	1
5	5.0.014.0305	VEIO POSTERIOR PORTA ORINGS TORN. ALAVANCA MINI CROM.	REAR SHAFT MINI LEVER TAP CROM.	1
6	5.0.014.0306	ORING VEIO POST. TORN. ALAVANCA MINI	SHAFT ORING MINI LEVER TAP	2
7	5.0.014.0304	MOLA VEIO TORN. ALAVANCA MINI	SHAFT SPRING MINI LEVER TAP	1
9	5.0.014.0314	VEIO VALVULA ANTI-RETORNO TORN. ALAVANCA MINI	ANTI-BACKFLOW VALVE SHAFT MINI LEVER TAP	1
10	5.0.014.0315	JUNTA 11X4X4 VALVULA ANTI-RETOR. TORN. ALAVANCA MINI CROM.	GASKET 11X4X4MM ANTI-BACKFLOW VALVE MINI LEVER TAP CROM.	1
11	5.0.014.0316	RACORD POSTERIOR VALVULA ANTI-RETOR. TORN. ALAVANCA MINI CROM.	REAR RACORD ANTI-BACKFLOW VALVE MINI LEVER TAP CROM.	1
12	5.0.014.0313	VALVULA ANTI-RETORNO TORN. ALAVANCA MINI	S/STEEL CYLIND. HEAD SCREW W/ HEX. SOCKET M6X14 UNI 5931	1
13	5.0.014.0312	MOLA VALVULA ANTI-RETORNO TORN. ALAVANCA MINI CROM.	ANTI-BACKFLOW VALVE MINI LEVER TAP	1
14	5.0.014.0302	JUNTA TEFLON 19.8X16.7X2 TORN. ALAVANCA MINI	TEFLON GASKET 19.8X16.7X2MM MINI LEVER TAP	1

restoran

MÁQ. CAFÉ NAU CLASSICA

ESPRESSO COFFEE MACHINE NAU CLASSICA

24 - 7.0.014.0144 - BOMBA VIBRATÓRIA CONJ. NAU CLASSICA

VIBRATORY PUMP ASS. NAU CLASSICA

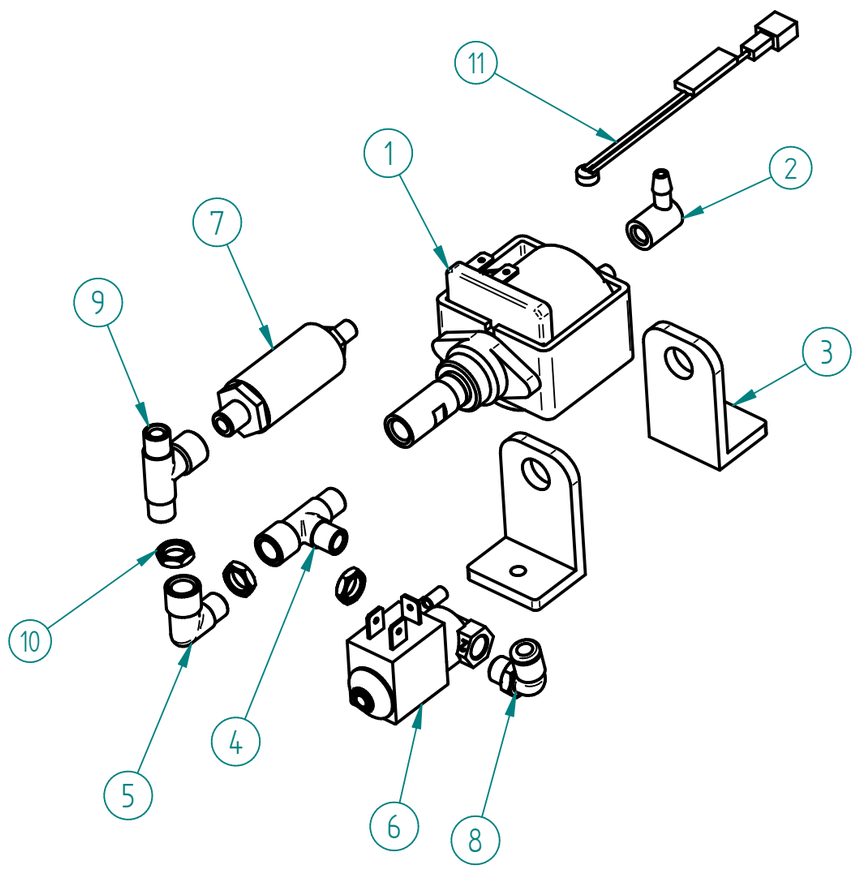

ITEM Nº	CÓDIGO	DESIGNAÇÃO	DESIGNATION	QUANT.
1	5.0.000.2041	BOMBA VIBRATORIA 230V	VIBRATION PUMP 230V	1
2	5.0.000.0046	ADAPTADOR LIGAÇAO DEPOSITO BOMBA ULKA	RACORD ULKA PUMP	1
3	5.0.000.0043	APOIO BORRACHA EM L BOMBA VIBRATORIA	PUMP SUPPORT	2
4	5.0.000.0741	RACORD T G1/8F-G1/8-G1/8	RACORD T G1/8F-G1/8-G1/8	1
5	5.0.000.0728	RACORD L G1/8-G1/8F	RACORD L G1/8-G1/8F	1
6	4.0.002.0041	ELECTROVALVULA 2 VIAS 230V-ENT. AGUA MARINA	2 WAYS ELECTROVALVE	1
7	4.2.000.0013	VALVULA EXPANSAO REGULAVEL 9-13 BAR G1/8	ADJUSTABLE EXPANSION VALVE 9-13 BAR G1/8F	1
8	4.0.000.0108	RACORD L G1/8 TUBO TEFLON ø6	ø6 G1/8 TEFLON TUBE L RACORD	1
9	5.0.000.0735	RACORD T G1/8-G1/8-G1/8F	RACORD T G1/8-G1/8-G1/8F	1
10	4.0.000.0046	PORCA G1/8 LATAO NIQ.	BRASS NUT G1/8	3
11	5.0.000.0985	TERMICO 100°C ELECTROBOMBA ULKA	TERMICAL PROTECTION 100°	1

*16 - 7.0.014.0145 - BOMBA VIBRATÓRIA CONJ. 110V NAU CLASSICA

VIBRATORY PUMP ASS. 110V NAU CLASSICA

ITEM Nº	CÓDIGO	DESIGNAÇÃO	DESIGNATION	QUANT.
1	5.0.000.2045	BOMBA VIBRATORIA 110V	VIBRATION PUMP 110V	1
6	4.0.002.0042	ELECTROVALVULA 2 VIAS 110-120V/60Hz - ENT. AGUA SB08	2 WAY SOLENOIDE VALVE 110-120V/60Hz - SB08 WATER INLET TAP	1

16 - 7.0.014.0146 - BOMBA VIBRATÓRIA CONJ. 220V 60HZ NAU CLASSICA

VIBRATORY PUMP ASS. 220V 60HZ NAU CLASSICA

ITEM Nº	CÓDIGO	DESIGNAÇÃO	DESIGNATION	QUANT.
1	5.0.000.2042	BOMBA VIBRATORIA 220V 60HZ	VIBRATION PUMP 220V 60HZ	1
6	4.0.037.0104	ELECTROVALVULA 2 VIAS 230V INOX - G1/8F Ø1,9	2-WAY SOL.VALVE 230V INOX - G1/8F Ø1,9	1

EXCLUSIVO MODELOS NAU CLASSICA PRO

EXCLUSIVE NAU CLASSICA PRO MODELS

84 - 7.0.014.0148 - MOTOR BOMBA MICRO CONJ. NAU CLASSICA PRO

MOTOR PUMP ASS. NAU CLASSICA PRO

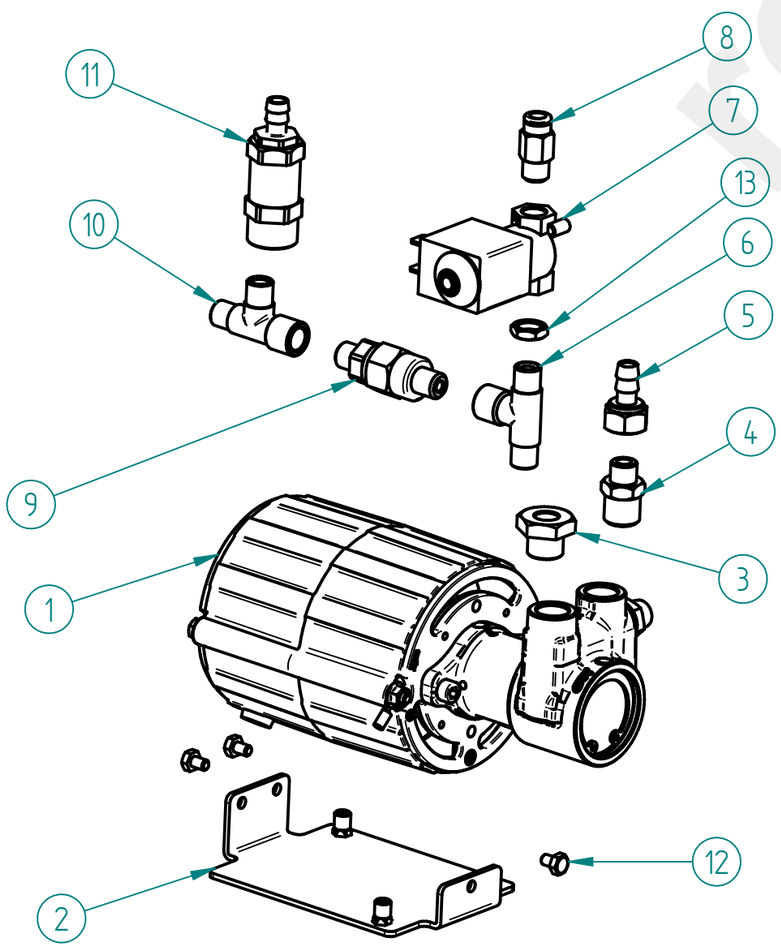

ITEM Nº	CÓDIGO	DESIGNAÇÃO	DESIGNATION	QUANT.
1	5.0.000.0489	MOTOR BOMBA MICRO	MOTOR PUMP MICRO	1
2	7.0.014.0010	BASE MOTOR BOMBA MICRO	MOTOR PUMP MICRO FRAMEWORK	1
3	4.0.160.0060	RACORD SONDA G1/4 NIQ.	PROBE RACORD G1/4	1
4	5.0.000.0724	RACORD G1/8 - G1/4 NIQ.	RACORD G1/8-G1/4 NIQ.	1
5	4.0.000.0198	RACORD DESCARGA ELECTROVALVULA	ELECTROVALVE DRAINAGE RACCORD	1
6	5.0.000.0735	RACORD T G1/8-G1/8-G1/8F	RACORD T G1/8-G1/8-G1/8F	1
7	4.0.002.0041	ELECTROVALVULA 2 VIAS 230V-ENT. AGUA MARINA	2 WAYS ELECTROVALVE	1
8	4.0.000.0104	RACORD G1/8 TUBO TEFLON ø6	ø6 G1/8 TEFLON TUBE RACORD	1
9	5.0.014.0015	VALVULA ANTI-RETORNO G1/8-G1/8	NON-RETURN VALVE G1/8-G1/8	1
10	5.0.000.0741	RACORD T G1/8F-G1/8-G1/8	RACORD T G1/8F-G1/8-G1/8	1
11	5.0.037.0026	VALVULA EXPANSÃO INOX 13 BAR - G1/8	EXPANSION VALVE 13 BAR - G1/8	1
12	4.2.000.9061	PARAFUSO CAB. SEXT. M4X6 NIQ. DIN933	M4X6 NIQ. DIN933 HEX HEAD SREW	3
13	4.0.000.0046	PORCA G1/8 LATAO NIQ.	BRASS NUT G1/8	1

*16 - 7.0.014.0149 - MOTOR BOMBA MICRO 110V CONJ. NAU CLASSICA PRO

MOTOR PUMP ASS. NAU CLASSICA PRO

ITEM Nº	CÓDIGO	DESIGNAÇÃO	DESIGNATION	QUANT.
1	5.0.000.0488	MOTOR BOMBA MICRO 110V UL	MOTOR PUMP MICRO	1
7	4.0.002.0042	ELECTROVALVULA 2 VIAS 110-120V/60Hz - ENT. AGUA SB08	2 WAY SOLENOIDE VALVE 110-120V/60Hz - SB08 WATER INLET TAP	1

Management System ISO 9001:2015
TÜVRheinland CERTIFIED
www.tuv.com ID 9108624282

MÁQ. CAFÉ NAU CLASSICA

ESPRESSO COFFEE MACHINE NAU CLASSICA

41 - CALDEIRA 2 LT C/ ACESSORIOS CONJ. NAU CLASSICA

2 LT BOILER W/ ACESS. ASS. NAU CLASSICA

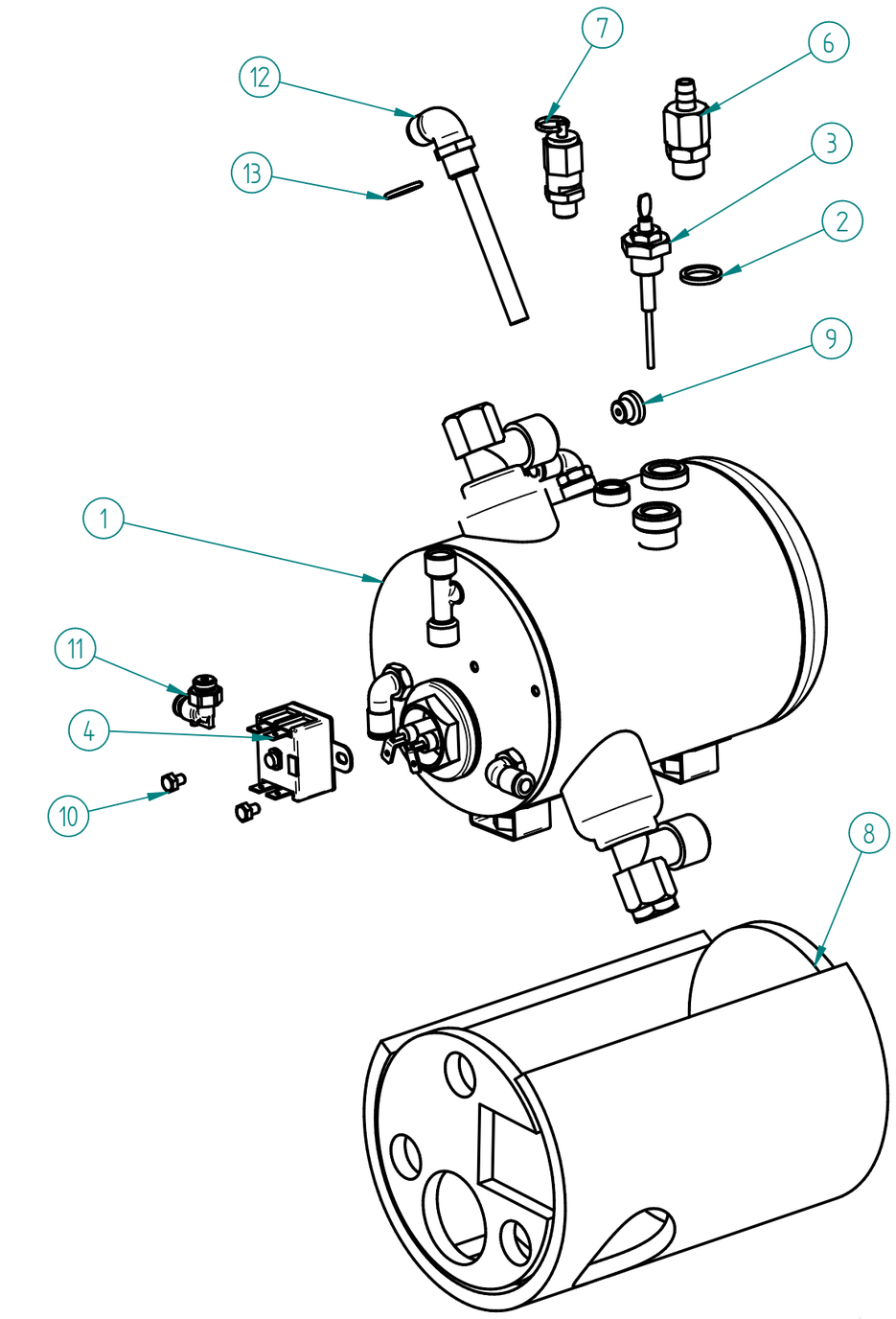

ITEM Nº	CÓDIGO	DESIGNAÇÃO	DESIGNATION	QUANT.
1	7.0.000.0537	CALDEIRA 1GR 2LT C/ ACESS.	1 GR 2LT BOILER W/ ACESS.	1
2	5.0.000.0315	JUNTA TEFLON 18X13,5X2MM	TEFLON GASKET	1
3	7.0.014.0140	SONDA NIVEL CALDEIRA CONJ. NAU CLASSIC	PROBE ASS. NAU CLASSICA	1
4	4.0.000.0250	TERMOSTATO SEGURANÇA 130°	SAFETY THERMOSTAT 130°	1
6	5.0.000.1002	VALVULA ANTI-VACUO	ANTI VACUUM VALVE	1
7	4.0.000.0054	VALVULA SEGURANÇA CALDEIRA G1/8	BOILER SECURITY VALVE G1/8	1
8	4.0.000.0427	ISOLAMENTO CALDEIRA 1GR 2LT	BOILER INSULATION 1GR 2LT	1
9	5.0.000.0748	REDUTOR CAUDAL 2,5MM	FLOW REDUCER 2,5MM	1
10	4.2.000.9061	PARAFUSO CAB. SEXT. M4X6 NIQ. DIN933	M4X6 NIQ. DIN933 HEX HEAD SREW	2
11	4.0.000.0103-A	RACORD L G1/8-TUBO Ø4	"L" FITTING G1/8-TUBO Ø4	1
12	4.2.000.0121	RACORD INJECTOR SUPERIOR C/ TUBO NV	INJECTION RACORD W/ TUBE NV	1
13	4.0.000.0013	ANILHA 13x17MM (G1/4) COBRE	GASKET G1/4 CU	1
14*	7.0.000.0565	CALDEIRA 1GR 2LT C/ ACESS. 110V	1 GR 2LT BOILER W/ ACESS. 110V	1

**** - COMPONENTE USADO NAS VERSÕES 110/120V / PARTS USED IN 110/120V VERSIONS***

1 - 7.0.000.0537 - CALDEIRA 1GR 2LT C/ ACESS.

1GR 2LT BOILER WITH ACESS.

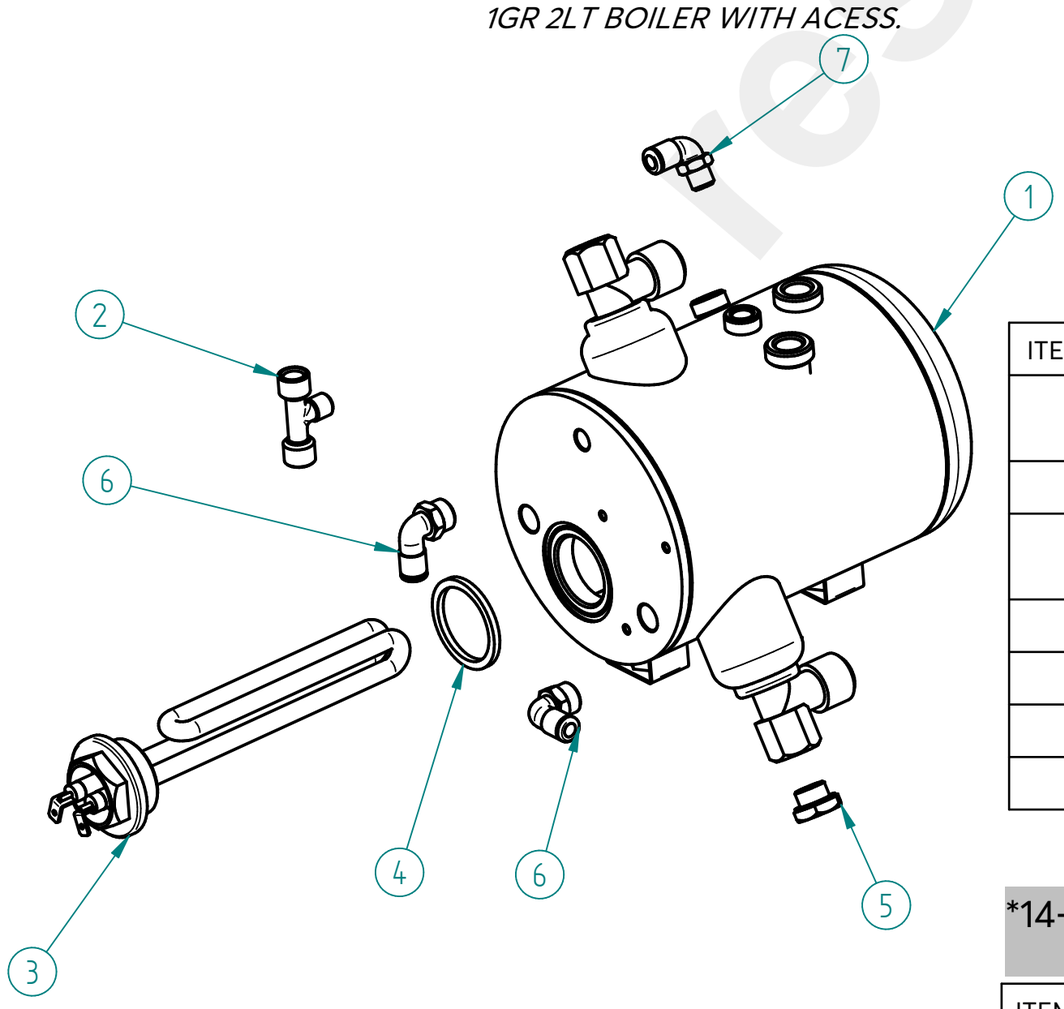

ITEM Nº	CÓDIGO	DESIGNAÇÃO	DESIGNATION	QUANT.
1	7.0.000.0548	CALDEIRA 1GR 2LT (RACORD SOLDADO)	1 GROUP 2LT BOILER	1
2	5.0.000.0740	RACORD T G1/8F-G1/8F-G1/8	RACORD L G1/8-G1/8F	1
3	4.0.000.0218	RESISTENCIA FLANGE RED. 1800W 1GR	BOILER HEATING ELEMENT 1800W 230V 1GR	1
4	5.0.000.0305	JUNTA RESISTENCIA SUPERBAR	HEATING ELEMENT GASKET	1
5	4.0.000.0151	TAMPAO G1/4 LATAO	BRASS COVER G1/4	1
6	4.0.000.0109	RACORD L G1/4 TUBO TEFLON ø6	ø6 G1/4 TEFLON TUBE L RACORD	2
7	4.0.000.0108	RACORD L G1/8 TUBO TEFLON ø6	ø6 G1/8 TEFLON TUBE L RACORD	1

*14- 7.0.0000.0565 - CALDEIRA 1GR 2LT C/ ACESS. 110V

1GR 2LT BOILER WITH ACESS. 110V

ITEM Nº	CÓDIGO	DESIGNAÇÃO	DESIGNATION	QUANT.
3	5.0.000.0783-A	RESISTENCIA FLANGE RED. 1700W 120V 1GR	BOILER HEATING ELEMENT 1700W 120V 1GR	1

Management System ISO 9001:2015
TÜVRheinland CERTIFIED
www.tuv.com ID 9108624282

This drawing may be altered without previous notice.
Os elementos deste desenho podem ser alterados sem aviso prévio.

MÁQ. CAFÉ NAU CLASSICA

ESPRESSO COFFEE MACHINE NAU CLASSICA

75 - 5.0.000.0625 - PORTA FILTRO REFORÇADO CONJ. RST VERMELHO - 2 BICAS

FILTER HOLD. REINF. ASSEMB. RST RED - 2 COFFEE CUP

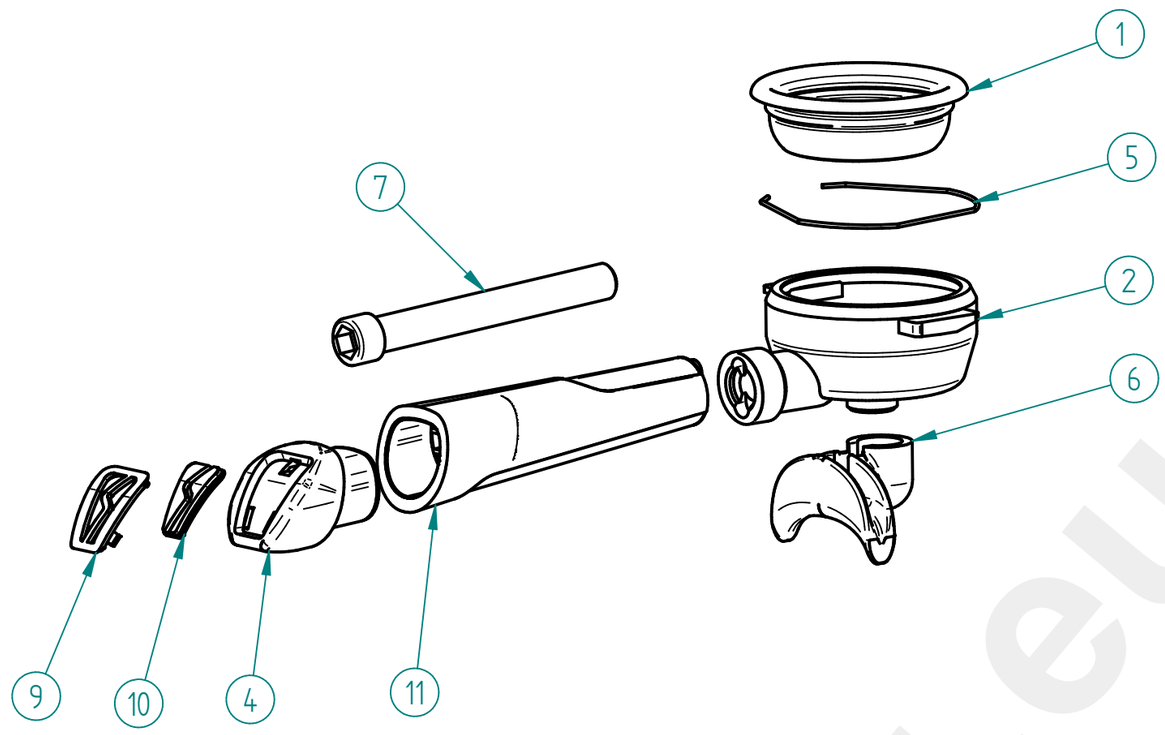

ITEM Nº	CÓDIGO	DESIGNAÇÃO	DESIGNATION	QUANT.
1	5.0.000.0173	FILTRO 2 BICAS 12 GR	2 COFFEES FILTER 12 GR	1
2	5.0.000.0653-A	PORTA FILTRO M12 INCLIN. - REFORÇADO	FILTER HOLDER	1
4	4.0.007.0163	TAMPAO CROMADO PUNHO PORTA FILTRO RST NV	CHROME FILTER HOLDER HANDLE RST	1
5	5.0.000.0411	MOLA PORTA FILTRO 1,2MM	FILTER HOLDER SPRING	1
6	5.0.000.0106	DISTRIBUIDOR 2 BICAS	2 COFFEES OUTLET	1
7	4.0.007.0149	PARAFUSO UMBR. M12X100 ZINC. DIN912	CYLIND. HEAD SCREW W/ HEX. SOCKET M12X100 ZINC. DIN912	1
9	4.0.007.0166	INSERTO TAMPAO PUNHO PORTA FILTRO RST NV	INSERT FILTER HOLDER HANDLE RST	1
10	4.0.007.0169	SIMBOLO FIAMMA VERMELHO PUNHO PORTA FILTRO RST NV	RED SYMBOL FIAMMA FILTER HOLDER HANDLE RST	1
11	4.0.007.0160-A	PUNHO PORTA FILTRO RST NV	FILTER HOLDER HANDLE RST NV	1

62 - 5.0.000.0624 - PORTA FILTRO REFORÇADO CONJ. RST BRANCO - 2 BICAS

FILTER HOLD. REINF. ASSEMB. RST WHITE - 2 COFFEE CUP

ITEM Nº	CÓDIGO	DESIGNAÇÃO	DESIGNATION	QUANT.
10	4.0.007.0170	SIMBOLO FIAMMA BRANCO PUNHO PORTA FILTRO RST NV	WHITE SYMBOL FIAMMA FILTER HOLDER HANDLE RST	1

ACESSÓRIOS / *ACCESSORIES*

5.0.000.0179	FILTRO 2 BICAS 14GR/16GR	2 CUPS FILTER 14/16GR	1
5.0.000.0161	FILTRO 1 BICA CONICO FIAMMA	CONICAL 1 CUP FILTER FIAMMA	1
5.0.000.0167	FILTRO CEGO	BLIND FILTER	1
4.0.000.0817	ESCOVA	BRUSH	1
7.0.000.0039	FILTRO DEPOSITO AQUAGUSTO 100 BRITA C/ SACO	AQUAGUSTO 100 BRITA TANK FILTER WITH BAG	1
4.0.000.0109	RACORD L G1/4-TUBO Ø6 NIQ.	L FITTING G1/4 - Ø6 PIPE	1
4.0.000.0116	RACORD G1/4F-G3/8F NIQ	NICKEL-PLATED FITTING G1/4F-G3/8F	1
4.0.014.0050	ANILHA VEDANTE G3/8	SEALING WASHER G3/8	1
4.0.000.0850	TUBO TEFLON CALIBRADO Ø6X4MM	CALIBRATED TEFLON PIPE Ø6X4MM	----
4.0.000.0852	TUBO TEFLON CALIBRADO Ø4X2,5MM	CALIBRATED TEFLON PIPE Ø4X2,5MM	----

Management System ISO 9001:2015
TÜVRheinland CERTIFIED
www.tuv.com ID 9108624282

www.fiamma.pt

This drawing may be altered without previous notice.
Os elementos deste desenho podem ser alterados sem aviso prévio.

MB „Restoranų įranga“ · Vito Gerulaičio 1-59, LT-08200 Vilnius · +370 614 89888 · info@restoranu.eu · www.restoranu.eu

MÁQ. CAFÉ NAU CLASSICA

ESPRESSO COFFEE MACHINE NAU CLASSICA

ESQUEMA ELECTRICO (NAU CLASSICA)

Electric Scheme (NAU CLASSICA)

EXCLUSIVE NAU CLASSICA PRO MODELS

R01

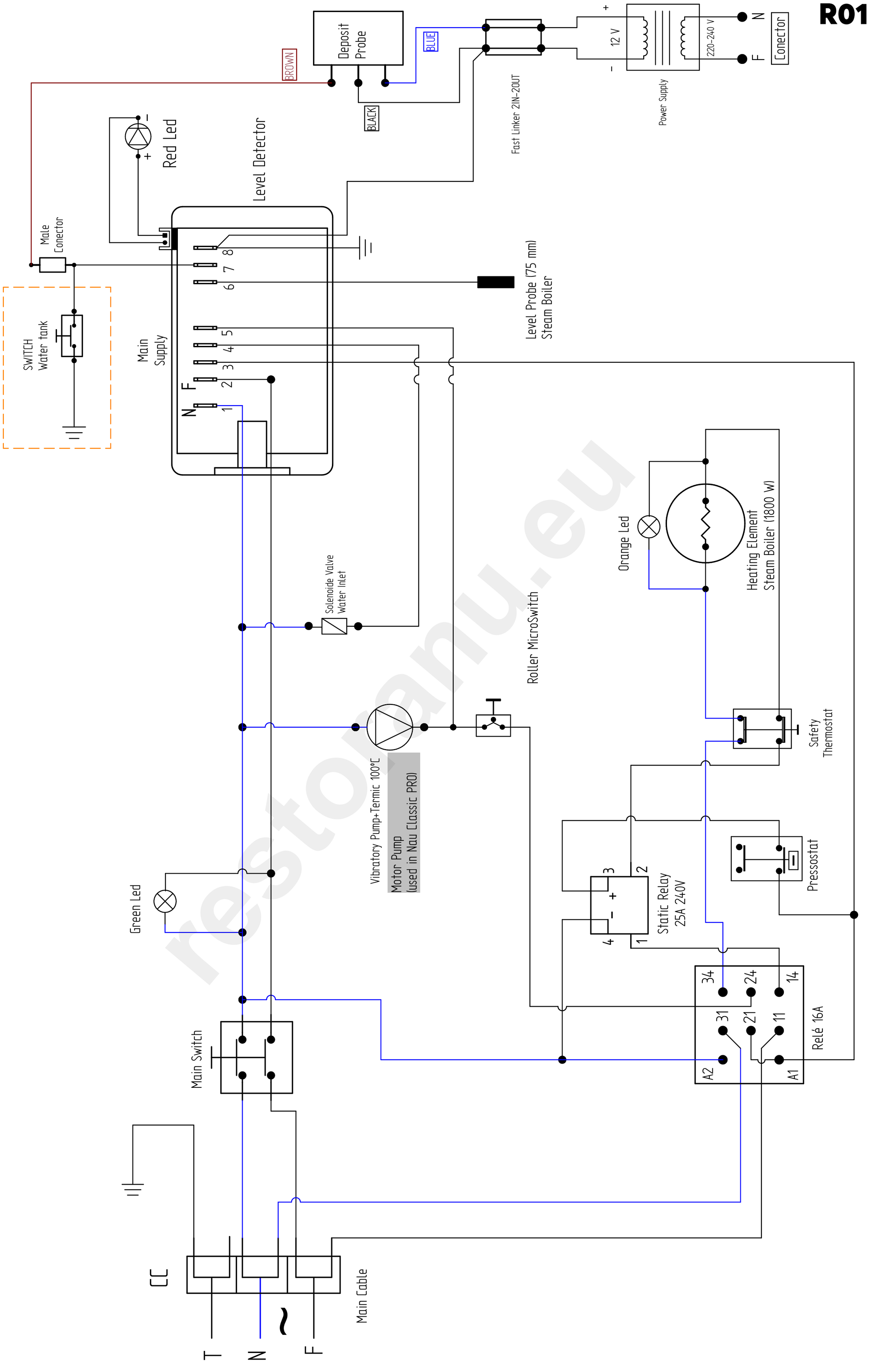

restoranu.eu

fiamma

RST

TÜVRheinland CERTIFIED Management System ISO 9001:2015 www.tuv.com ID 9108624282

www.fiamma.pt

This drawing may be altered without previous notice.
Os elementos deste desenho podem ser alterados sem aviso prévio.