R00

MÁQUINA CAFÉ ESPRESSO

ESPRESSO COFFEE MACHINE



MÁQ. CAFÉ QUADRANT 2 CV TC WHITE - 2.0.033.0015

ESPRESSO COFFEE MACHINE QUADRANT 2 CV TC WHITE

MÁQ. CAFÉ QUADRANT 2 CV TC BLACK - 2.0.033.0016

ESPRESSO COFFEE MACHINE QUADRANT 2 CV TC BLACK

POTÊNCIA ..... **3700 W**
POWER

TENSÃO DE ALIMENTAÇÃO ..... **~ 220-240V - 50/60Hz**
POWER SUPPLY

GRUPOS **2**
GROUPS

CAPACIDADE DA CALDEIRA ..... **11 L**
BOLLER CAPACITY

TORNEIRAS DE AGUA / VAPOR ..... **1 / 2**
WATER TAP / STEAM TAP

PESO LIQUIDO ..... **62 kg**
NET WEIGHT

PESO BRUTO ..... **69 kg**
GROSS WEIGHT

DIMENSÕES (LxPxH) ..... **750 x 600 x 595 mm**
DIMENSIONS

DIMENSÕES DA EMBALAGEM (LxPxH) ..... **860 x 700 x 650 mm**
PACKAGE DIMENSIONS

20160523
TÜVRheinland CERTIFIED
Management System ISO 9001:2008
www.tuv.com ID 9108624282

Os elementos deste desenho podem ser alterados sem aviso prévio.
This drawing may be altered without previous notice.

R00

MÁQ. CAFÉ QUADRANT 2 CV TC

ESPRESSO COFFEE MACHINE QUADRANT 2 CV TC

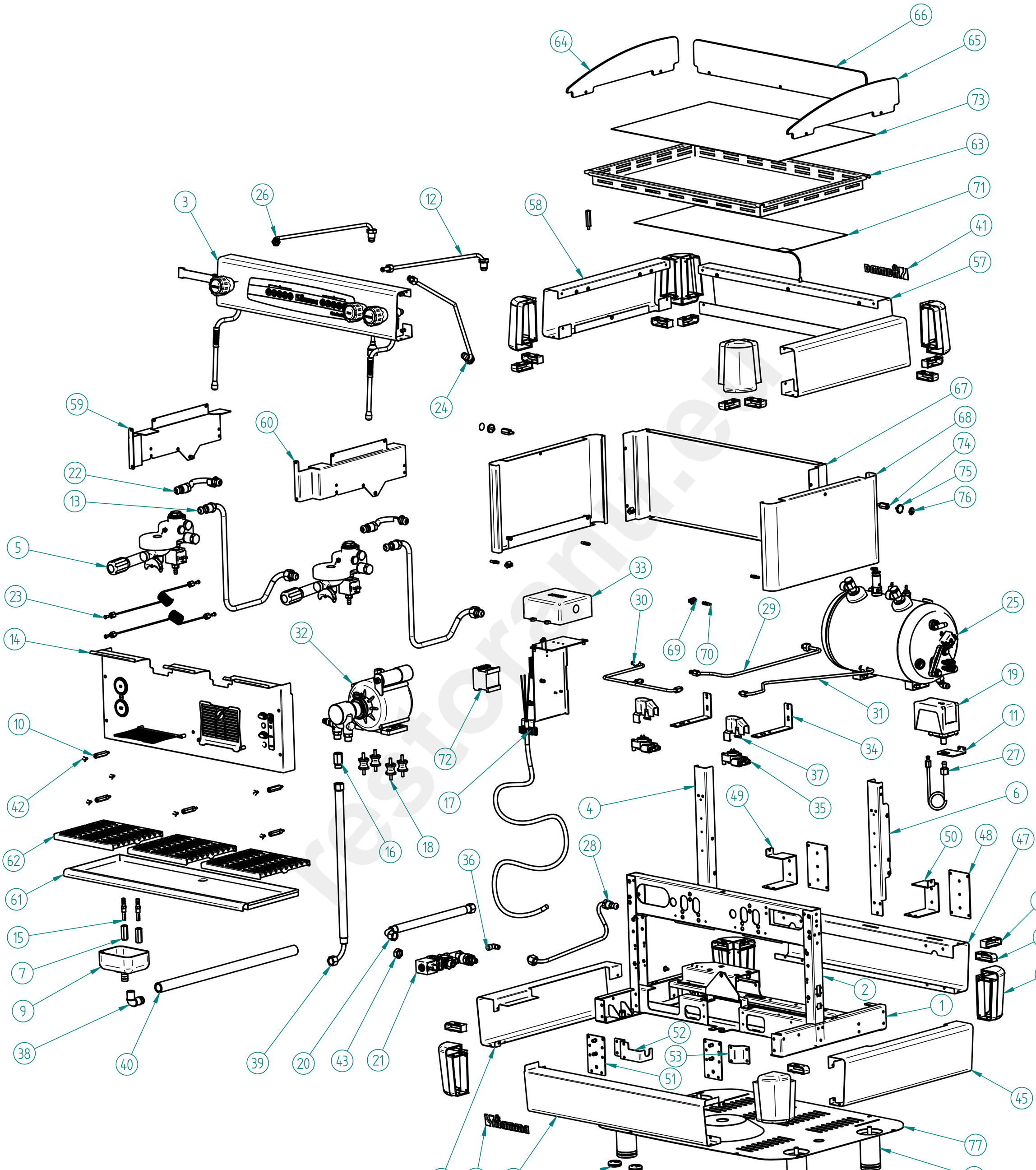

MÁQ. CAFÉ QUADRANT 2 CV TC BLACK - 2.0.033.0016

ESPRESSO COFFEE MACHINE QUADRANT 2 CV TC BLACK

20160523

Management System ISO 9001:2008

TÜVRheinland CERTIFIED

www.tuv.com ID 9108624282

fiamma

behind every great taste

Os elementos deste desenho podem ser alterados sem aviso prévio.
This drawing may be altered without previous notice.

MÁQ. CAFÉ QUADRANT 2 CV TC

ESPRESSO COFFEE MACHINE QUADRANT 2 CV TC

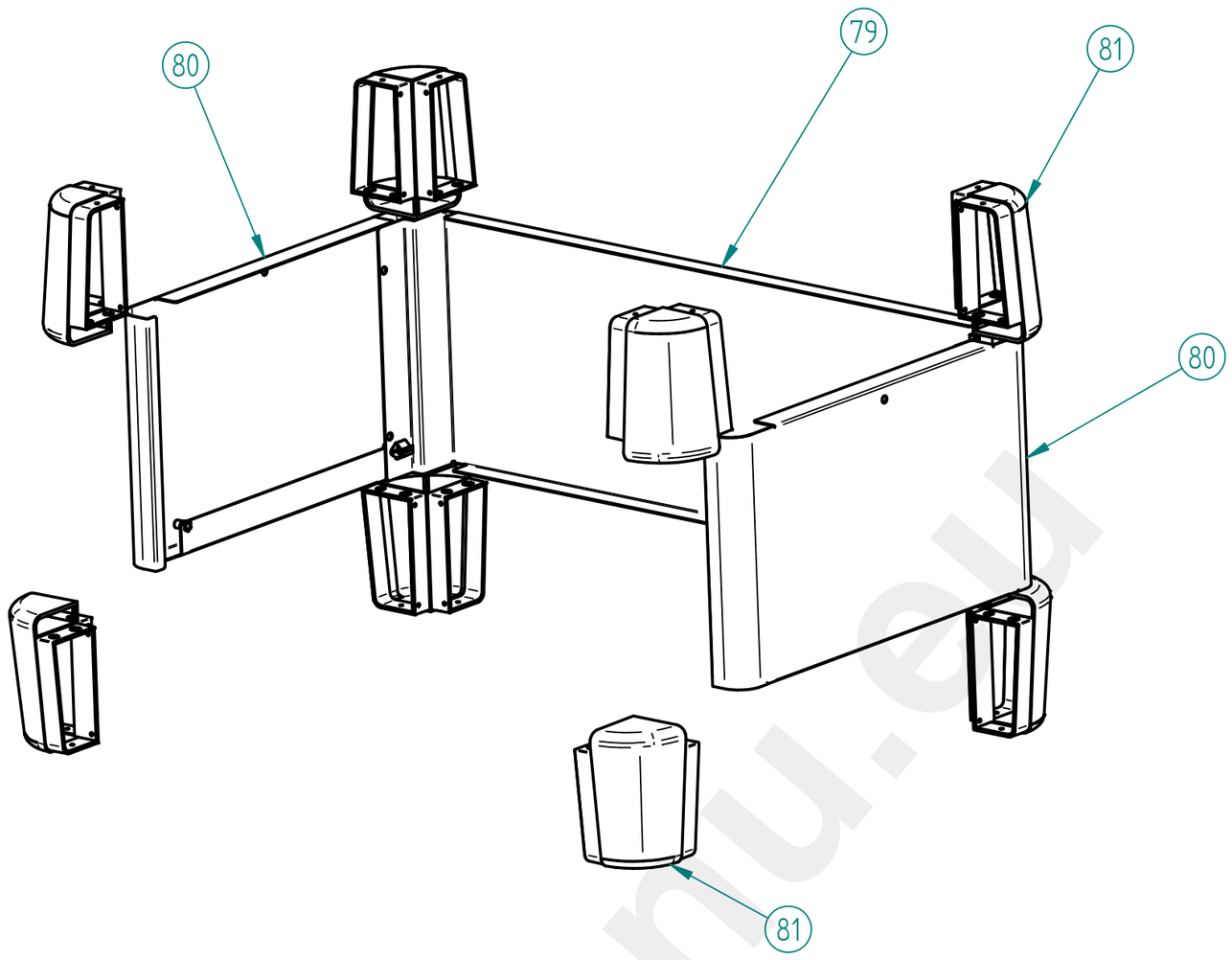

MÁQ. CAFÉ QUADRANT 2 CV TC WHITE - 2.0.033.0015

ESPRESSO COFFEE MACHINE QUADRANT 2 CV TC WHITE

restoranu.eu

20160523
TÜVRheinland CERTIFIED
Management System ISO 9001:2008
www.tuv.com ID 9108624282
fiamma behind every great taste

Os elementos deste desenho podem ser alterados sem aviso prévio.
This drawing may be altered without previous notice.

MÁQ. CAFÉ QUADRANT 2 CV TC

R00

ESPRESSO COFFEE MACHINE QUADRANT 2 CV TC

LISTA DE COMPONENTES E ACESSÓRIOS
Spare parts list

ITEM Nº	CÓDIGO	DESIGNAÇÃO	DESIGNATION	QUANT.
1	7.0.017.5511	CHASSI HORIZONTAL ATLANTIC 2 ECC	HORIZONTAL CHASSIS ATLANTIC 2 ECC	1
2	7.0.017.5512	CHASSI VERTICAL ATLANTIC 2 ECC	VERTICAL CHASSIS ATLANTIC 2 ECC	1
3	PRÉ-MONTAGEM	PM_PAINEL COMANDO SUPERIOR CONJ. QUADRANT 2 CV	UPPER COMMAND PANEL ASS. QUADRANT 2 CV	1
4	7.0.033.0043	CANTO POSTERIOR ESQ. QUADRANT	LEFT REAR SUPPORT QUADRANT	1
5		GRUPO ECC-07 C/ ACESSORIOS	ECC-07 GROUP W/ ACESS.	2
6	7.0.033.0041	CANTO POSTERIOR DIR. QUADRANT	RIGHT REAR SUPPORT QUADRANT	1
7	4.0.000.0190	CAMPANULA DESCARGA GRUPO	OUTER RACORD OF THE DRAINAGE ASSEMBLY	2
8	4.0.000.0801	PE MAQ. DE CAFE 50X80	FEET FOR COFFE MACHINE 50X80	4
9	4.0.000.0840	DEPOSITO ESGOTO PLASTICO	DRAIN TRAY	1
10	4.0.028.0070	SEPARADOR BLINDAGEM ELECTROV. GRUPOS	SHIELD GROUP SEPARATOR	6
11	7.0.016.1060	SUPORTE PRESSOSTATO MAQ. CAFE	PRESSURE SWITCH SUPPORT	1
12	7.0.000.0042	TUBO CALDEIRA TORN. VAPOR ESQ. ATLANTIC	TUBE BOILER/LEFT STEAM TAP	1
13	5.0.000.0947	TUBO INFERIOR CARTUCHO GRUPO 12mm	LOWER TUBE CARTRIDGE/GROUP 12MM	2
14	PRE-MONTAGEM	PM_PAINEL FRONTAL CONJ. QUADRANT 2 CV TC	FRONT PANEL QUADRANT 2 CV TC	1
15	4.0.000.0195	RACORD CAMPANULA DESCARGA GRUPO	INNER RACORD OF THE DRAINAGE ASSEMBLY	2
16	4.0.000.0040	PORTA FILTRO ENT. AGUA C/ FILTRO NIPLESS	FILTER HOLDER OF WATER INLET	1
17	7.0.033.0101	CABO H07RN-F 3G2,5 - 1,8MT CONJ. MAQ. CAFE 2GR	2GR COFFEE MACHINES CABLE H07RN-F 3G2,5 - 1,8MT	1
18	4.0.000.0032	APOIO MOTOR	MOTOR SUPPORT	4
19	5.0.000.0680	PRESSOSTATO 30A/400V 0,5-1,4BAR	PRESSURE SWITCH 30A/400V 0,5-1, 4BAR	1
20	5.0.000.0912	TUBO LIGAÇAO BOMBA C/ CURVA 330MM	PUMP CONNECTION W/ ELBOW 330MM	1
21	7.0.016.0065	BLOCO ENTRADA AGUA ECC-07 (AUT.) CONJ.	WATER INLET ASS.	1
22	7.0.000.0054	TUBO SUP. CART. 1ºGR (DIR.) REVOL.	TUBE CARTRIDGE/GROUP	2
23	7.0.000.0022	TUBO CAPILAR 1,27X2,5X1000	CAPILLARY TUBE	2
24	7.0.000.0041	TUBO CALDEIRA TORN. AGUA ATLANTIC	TUBE BOILER/WATER TAP	1
25		CALDEIRA 11LT C/ ACESS.	11T BOILER W/ ACESS.	1
26	7.0.000.0070	TUBO CALDEIRA TORN. VAPOR ESQ. QUADRANT	TUBE BOILER/LEFT STEAM TAP QUADRANT	1
27	7.0.000.0051	TUBO CALDEIRA PRESSOSTATO REVOL./ATLANTIC	TUBE BOILER/PRESSURE SWITCH	1
28	7.0.000.0065	TUBO BLOCO CALDEIRA	TUBE DISTRIB. GROUP/BOILER	1
29	7.0.000.0111	TUBO CONT. VOL. INJECTOR ESQ. (2GR/3GR)	TUBE VOL. DOSER/INJECTOR	1
30	7.0.000.0102	TUBO BLOCO CONT. VOL. 2GR	TUBE DISTRIB. GROUP/VOL. DOSER 2GR	1
31	7.0.000.0112	TUBO CONT. VOL. INJECTOR DIR./ CENT. (2GR/3GR)	TUBE VOL. DOSER/INJECTOR	1
32	7.0.016.0060	MOTOR BOMBA CONJ.	PUMP-MOTOR ASS.	1
33	4.0.000.0953	UNIDADE ELECTRONICA GICAR	ELECTRONIC UNIT	1
34	7.0.007.0207	SUPORTE CONTADOR VOL. COMPASS MB	VOLUMETRIC DOSER SUPPORT	2
35	PRE-MONTAGEM	CONTADOR VOLUMETRICO CONJ. MÁQ. CAFE 2GR / 3GR	ASS. VOLUMETRIC DOSER PRESTIGE, ATLANTIC 2/3CV ECC	2
36	5.0.000.0728	RACORD L G1/8-G1/8F	RACORD L G1/8-G1/8F	1
37	5.0.000.1013	BLINDAGEM CONTADOR VOLUMETRICO	SHIELD VOLUMETRIC DOSER	2
38	4.0.000.0845	RACORD L DEPOSITO ESGOTO PLASTICO	ANGLE RACORD	1
39	4.0.000.0818	TUBO ALIMENTAÇÃO C/ CURVA 1500MM	WATER INLET PIPE 1500MM	1

ITEM Nº	CÓDIGO	DESIGNAÇÃO	DESIGNATION	QUANT.
40	4.0.000.0222	TUBO ESGOTO	DRAIN TUBE	1
41	4.0.007.0068	AUTOCOLANTE FIAMMA (TRANSFER) 150MM	FIAMMA DECAL 150MM	2
42	4.2.000.9116	PARAFUSO CAB. OVAL LARGA M5X10 NIQ	SCREW M5X10	7
43	4.0.016.0014	TAMPAO G3/8F LATAO	BRASS COVER G3/8F	1
44	7.0.007.0041	PAINEL FRONTAL INF. COMPASS 2	FRONT PANEL LOWER COMPASS 2	1
45	7.0.007.0043	PAINEL LATERAL INF. DIR. COMPASS	RIGHT PANEL LOWER COMPASS 2	1
46	7.0.007.0044	PAINEL LATERAL INF. ESQ. COMPASS	LEFT PANEL LOWER COMPASS 2	1
47	7.0.007.0047	PAINEL POSTERIOR INF. COMPASS 2	REAR PANEL LOWER COMPASS 2	1
48	7.0.007.0015	REFORCO PAINEL POST. INF. COMPASS	REAR PANEL LOWER COMPASS	2
49	7.0.033.0037	FIXADOR PAINEL POST. INF. ESQ. QUADRANT	LEFT REAR PANEL LOWER FASTENER	1
50	7.0.033.0035	FIXADOR PAINEL POST. INF. DIR. QUADRANT	RIGHT REAR PANEL LOWER FASTENER	1
51	7.0.007.0010	REFORÇO PAINEL FRONTAL INF. COMPASS	FRONT PANEL LOWER SUPPORT	2
52	7.0.007.0012	FIXADOR PAINEL FRONTAL INF. / BLOCO COMPASS	FRONT PANEL LOWER FASTENER	1
53	7.0.007.0011	FIXADOR PAINEL FRONTAL INF. COMPASS	FRONT PANEL LOWER FASTENER	1
54	4.0.007.0092	CANTO COMPASS BLACK	CORNER COMPASS BLACK	8
55	4.0.007.0004	POSTIÇO 1 CANTO COMPASS	CORNER INSERT 1 COMPASS	7
56	4.0.007.0005	POSTIÇO 2 CANTO COMPASS	CORNER INSERT 2 COMPASS	7
57	7.0.033.0013	PAINEL POSTERIOR SUP. QUADRANT 2	REAR PANEL LOWER QUADRANT 2	1
58	7.0.033.0011	PAINEL LATERAL SUP. QUADRANT	UPPER SIDE PANEL QUADRANT	2
59	7.0.033.0033	SUPORTE PAINEL LAT. SUP. ESQ. QUADRANT	LEFT PANEL UPPER FASTENER	1
60	7.0.033.0031	SUPORTE PAINEL LAT. SUP. DIR. QUADRANT	RIGHT PANEL UPPER FASTENER	1
61	7.0.007.0081	TABULEIRO INFERIOR COMPASS 2	LOWER TRAY COMPASS 2	1
62	7.0.007.0083	GRELHA TABULEIRO INF. COMPASS	LOWER TRAY GRID COMPASS	3
63	7.0.033.0025	TABULEIRO SUPERIOR QUADRANT 2	UPPER TRAY QUADRANT 2	1
64	4.0.033.0001	ACRILICO LATERAL ESQ. QUADRANT	ACRYLIC LEFT SIDE QUADRANT	1
65	4.0.033.0003	ACRILICO LATERAL DIR. QUADRANT	ACRYLIC RIGHT SIDE QUADRANT	1
66	4.0.033.0006	ACRILICO POSTERIOR QUADRANT 2	REAR ACRYLIC QUADRANT 2	1
67	7.0.033.0073	PAINEL POSTERIOR QUADRANT 2 TC BLACK	REAR PANEL QUADRANT 2 TC BLACK	1
68	7.0.033.0063	PAINEL LATERAL QUADRANT TC BLACK	SIDE PANEL QUADRANT TC BLACK	2
69	4.0.025.0085	MOLA FIXADORA PAINEL LAT.	FIXER SPRING	2
70	4.0.025.0090	PERNO FIXACÇAO PAINEL LAT.	FIXER PIN	4
71	5.0.000.0809	RESIST. ESCALDA CHAV. 530X230MM 75W 230V	HEATING ELEMENT FOR CUP HEATING	1
72	4.0.091.0003	CONTACTOR 22A-AC1 BOBINE 230V	CONTACTOR 22A-AC1 230V	1
73	7.0.033.0081	GRELHA REDE 585X360	WIRE MESH GRID 585X360	1
74	4.0.016.5052	SEPARADOR PAINEL LAT. ATLANTIC ECC	SIDE PANEL SEPARATOR ATLANTIC ECC	2
75	4.0.016.5054	PARAFUSO PAINEL LAT. ATLANTIC ECC	SCREW SIDE PANEL ATLANTIC ECC	2
76	4.0.016.5056	AUTOCOLANTE PAINEL LAT. ATLANTIC ECC	SIDE PANEL STICKER ATLANTIC ECC	2
77	7.0.007.0291	BLINDAGEM FUNDO COMPASS 2 TC	BOTTOM SHIELD COMPASS 2	1
78	4.0.000.0372	PASSA FIOS P/ FURO ⌀25MM	WIRE PROTECTION	2
79	7.0.033.0071	PAINEL POSTERIOR QUADRANT 2 TC WHITE	REAR PANEL QUADRANT 2 TC WHITE	1
80	7.0.033.0061	PAINEL LATERAL QUADRANT TC WHITE	SIDE PANEL QUADRANT TC WHITE	2
81	4.0.007.0091	CANTO COMPASS WHITE	CORNER COMPASS WHITE	8

restoran.eu

20160523

TÜVRheinland CERTIFIED — Management System ISO 9001:2008 — www.tuv.com ID 9108624282

fiamma — behind every great taste

Os elementos deste desenho podem ser alterados sem aviso prévio.
This drawing may be altered without previous notice.

MÁQ. CAFÉ QUADRANT 2 CV TC

R00

ESPRESSO COFFEE MACHINE QUADRANT 2 CV TC

3 – PAINEL COMANDO SUPERIOR CONJ. QUADRANT 2 CV TC

3 – UPPER COMMAND PANEL ASS. QUADRANT 2 TC

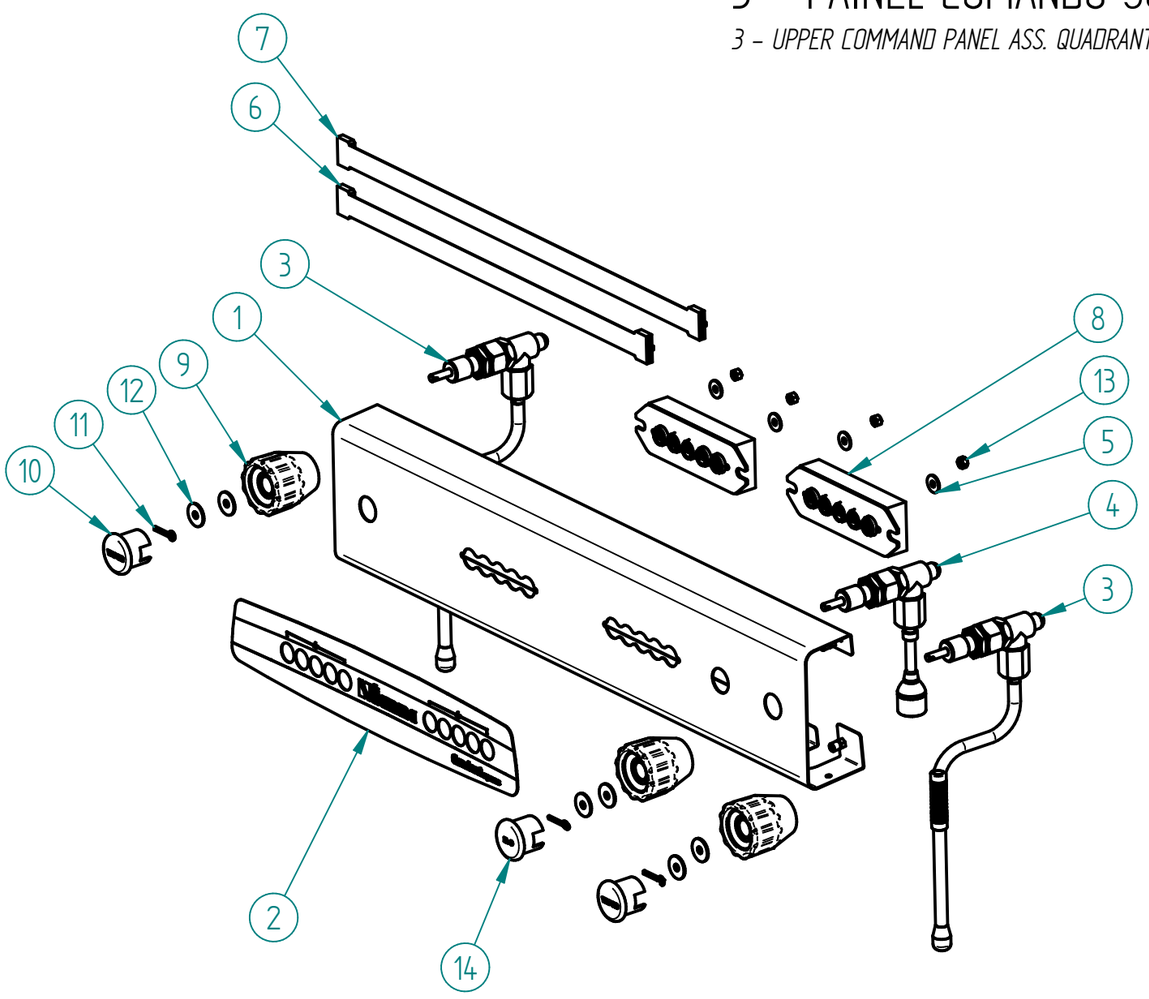

ITEM Nº	CÓDIGO	DESIGNAÇÃO	DESIGNATION	QUANT.
1	7.0.033.0003	PAINEL COMANDO SUP. QUADRANT 2 CV	UPPER CONTROL PANEL QUADRANT 2 CV	1
2	4.0.033.0063	PP QUADRANT 2 CV		1
3	7.0.028.1169	TORNEIRA ECC-07 G1/4-G1/8F (CONJ. VAPOR) PACIFIC MB	PACIFIC MB (STEAM GROUP) ECC-07 G1/4-G1/8F TAP	2
4	4.0.016.0021	TORNEIRA ECC-07 G1/4-G1/8F (CONJ. AGUA)	WATER TAP ASS. ECC-07	1
5	4.2.000.9164	ANILHA PLANA M5X15 ZINC. DIN9021	ZINC-PLATED M5X15 FLAT RING DIN9021	4
6	4.0.000.0971	CABO UNIDADE ELECTR. TECLADO 16 PIN 600MM	CABLE FOR ELECTR. UNIT KEYBOARD 16 PIN 600MM	1
7	4.0.000.0972	CABO UNIDADE ELECTR. TECLADO 16 PIN 850MM	CABLE FOR ELECTR. UNIT KEYBOARD 16 PIN 850MM	1
8	7.0.033.0103	TECLADO 5T ⌀16 CONJ. QUADRANT	⌀16 5T KEYBOARD ASS. QUADRANT	2
9	4.0.028.0023	MANIPULO TORNEIRA ECC-07 STAR	TAP HANDLE STAR	3
10	4.0.016.0027	TAMPAO MAN. TORN. ECC-07 (VAPOR)	ECC-07 TAP HANDLE COVER (STEAM)	2
11	4.0.016.0025	GOLPILHA INOX MAN. TORN. ECC-07	TAP ECC-07 LOCKER	3
12	4.0.016.0026	ANILHA LATAO 1,3MM MAN. TORN. ECC-07	MS WASHER 1,3MM	6
13	4.2.000.9172	PORCA M5 ZINC. DIN934	M5 NUT ZINC. DIN934	4
14	4.0.016.0028	TAMPAO MAN. TORN. ECC-07 (AGUA)	ECC-07 TAP HANDLE COVER (WATER)	1

3 – 7.0.028.1169 –TORNEIRA ECC-07 G1/4-G1/8F (CONJ. VAPOR) PACIFIC MB

3 – PACIFIC MB (STEAM GROUP) ECC-07 G1/4-G1/8F TAP

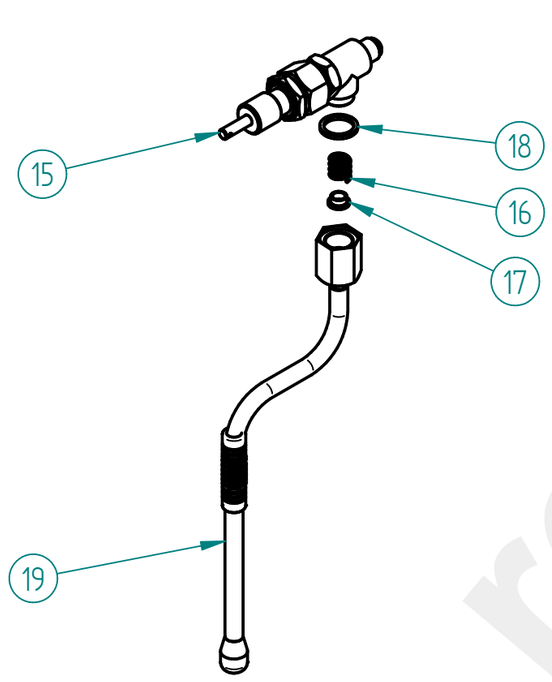

ITEM Nº	CÓDIGO	DESIGNAÇÃO	DESIGNATION	QUANT.
15	5.0.016.0350	TORNEIRA ECC-07 G1/4-G1/8F	TAP ECC-07	1
16	5.0.025.7060	MOLA TUBO AGUA/VAPOR TORN. EVOL.	SPRING TAP	1
17	5.0.025.6508	GUIA MOLA TUBO AGUA/VAPOR TORN. EVOL.	GUIDE BUSH	1
18	5.0.025.1386	JUNTA TEFLON 21X16,8X2	TEFLON GASKET	1
19	5.0.028.0320	TUBO TORNEIRA VAPOR PACIFIC (CONJ.)	PACIFIC STEAM TAP TUBE (GROUP)	1

4 – 4.0.016.0021 – TORNEIRA ECC-07 G1/4-G1/8F (CONJ. AGUA)

4 – WATER TAP ASS. ECC-07

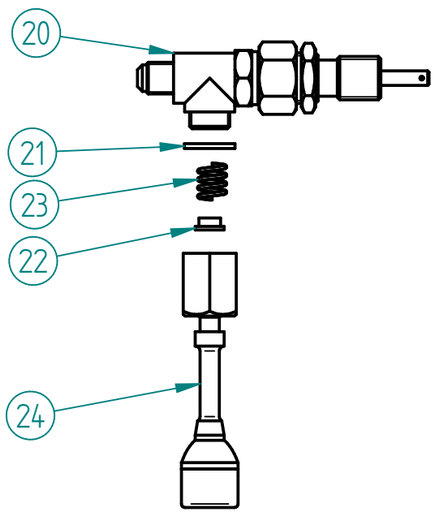

ITEM Nº	CODIGO	DESIGNAÇÃO	DESIGNATION	QUANT.
20	5.0.016.0350	TORNEIRA ECC-07 G1/4-G1/8F	TAP ECC-07	1
21	5.0.025.1386	JUNTA TEFLON 21X16,8X2	TEFLON GASKET	1
22	5.0.025.6508	GUIA MOLA TUBO AGUA/VAPOR TORN. EVOL.	GUIDE BUSH	1
23	5.0.025.7060	MOLA TUBO AGUA/VAPOR TORN. EVOL.	SPRING TAP	1
24	5.0.016.0330	TUBO TORNEIRA AGUA ATLANTIC (CONJ.)	WATER TAP TUBE ASS.	1

restoranu.eu

20160523

TÜVRheinland CERTIFIED — Management System ISO 9001:2008 — www.tuv.com ID 9108624282

fiamma — behind every great taste

Os elementos deste desenho podem ser alterados sem aviso prévio.
This drawing may be altered without previous notice.

MÁQ. CAFÉ QUADRANT 2 CV TC

R00

ESPRESSO COFFEE MACHINE QUADRANT 2 CV TC

15 / 20 - 5.0.016.0350 - TORNEIRA ECC-07 G1/4-G1/8F

15 / 20 - TAP ECC-07

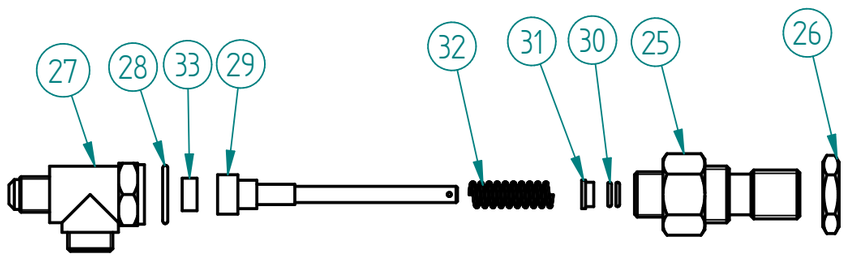

ITEM Nº	CODIGO	DESIGNAÇÃO	DESIGNATION	QUANT.
25	5.0.016.0304	RACORD FRONTAL TORN. ECC-07	FRONT ECC-07 TAP RACORD	1
26	4.0.155.0015	PORCA G1/2 LATAO	BRASS NUT G1/2	1
27	5.0.016.0300	CORPO TORNEIRA ECC-07	BODY OF THE TAP ECC-07	1
28	5.0.016.0303	JUNTA COBRE 22X17X2MM TORN. ECC-07	TAP GASKET	1
29	5.0.016.0308	VEIO TORNEIRA ECC-07	TAP ECC-07 SHAFT	1
30	5.0.016.0306	ORING VEIO TORN. ECC-07	TAP SHAFT ORING	2
31	5.0.016.0305	CASQUILHO VEIO TORN. ECC-07	METAL SLEEVE	1
32	5.0.016.0302	MOLA VEIO TORN. ECC-07	TAP SHAFT SPRING	1
33	5.0.016.0301	VEDANTE BORRACHA TORN. ECC-07	TAP ECC-07 GASKET	1

19 - 5.0.028.0320 - TUBO TORNEIRA VAPOR PACIFIC (CONJ.)

19 - PACIFIC STEAM TAP TUBE (ASS.)

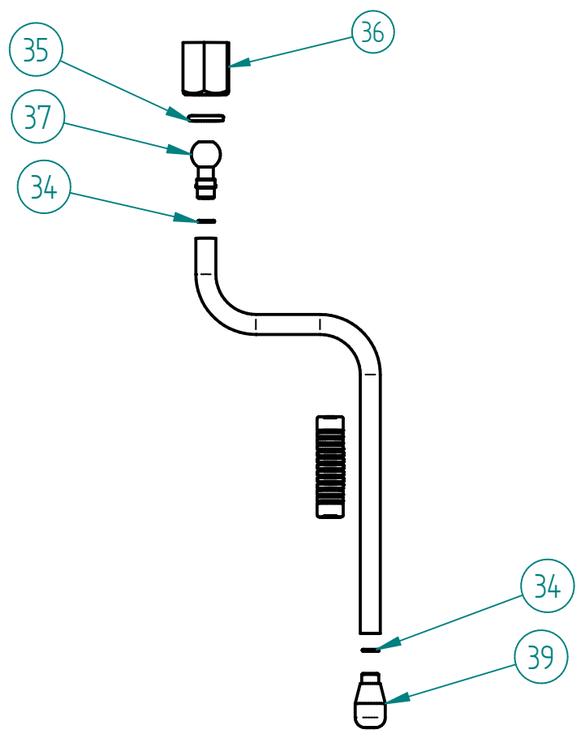

ITEM Nº	CÓDIGO	DESIGNAÇÃO	DESIGNATION	QUANT.
34	5.0.016.0323	ORING 6X1 TUBO VAPOR ATLANTIC	ORING 6X1	2
35	5.0.025.0205	ORING 12,1x2,7 PORCA TUBO TORN.	ORING 12,1x2,7	1
36	5.0.016.0321	PORCA TUBO TORN. ATLANTIC	TAP TUBE NUT	1
37	5.0.016.0326	ROTULA TUBO TORN. ATLANTIC M8,5X0,75	RACORD W/ SPHERE M8,5X0,75	1
39	5.0.028.0328	ESPALHADOR VAPOR TORN. PACIFIC M8, 5X0,75 - 3 FUROS	SPRAYER OF THE STEAM TAP - 3 HOLES	1

24 - 5.0.016.0330 - TUBO TORNEIRA AGUA ATLANTIC (CONJ.)

24 - WATER TAP TUBE ASS.

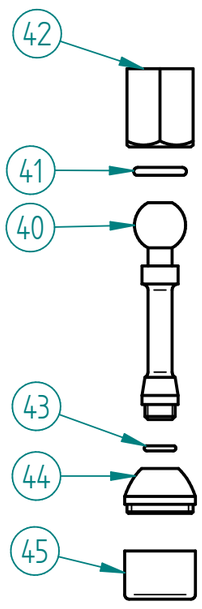

ITEM Nº	CODIGO	DESIGNAÇÃO	DESIGNATION	QUANT.
40	5.0.016.0331	TUBO TORNEIRA AGUA CROM. ATLANTIC	WATER TAP TUBE	1
41	5.0.025.0205	ORING 12,1x2,7 PORCA TUBO TORN.	ORING 12,1x2,7	1
42	5.0.016.0321	PORCA TUBO TORN. ATLANTIC	TAP TUBE NUT	1
43	5.0.000.0565	ORING 7,2X1,9 VEIO TORN. BR-03	TAP SHAFT ORING	1
44	5.0.000.0640	PONTEIRA TUBO ÁGUA	POINT OF THE WATER TUBE	1
45	5.0.000.0148	ESPALHADOR PONTEIRA ÁGUA	SPRAYER OF THE WATER POINT	1

restoranu.eu

20160523

TÜVRheinland CERTIFIED
Management System ISO 9001:2008
www.tuv.com ID 9108624282

fiamma
behind every great taste

Os elementos deste desenho podem ser alterados sem aviso prévio.
This drawing may be altered without previous notice.

MÁQ. CAFÉ QUADRANT 2 CV TC

ESPRESSO COFFEE MACHINE QUADRANT 2 CV TC

5 - GRUPO ECC-07 C/ ACESSORIOS

5 - ECC-07 GROUP W/ ACESS.

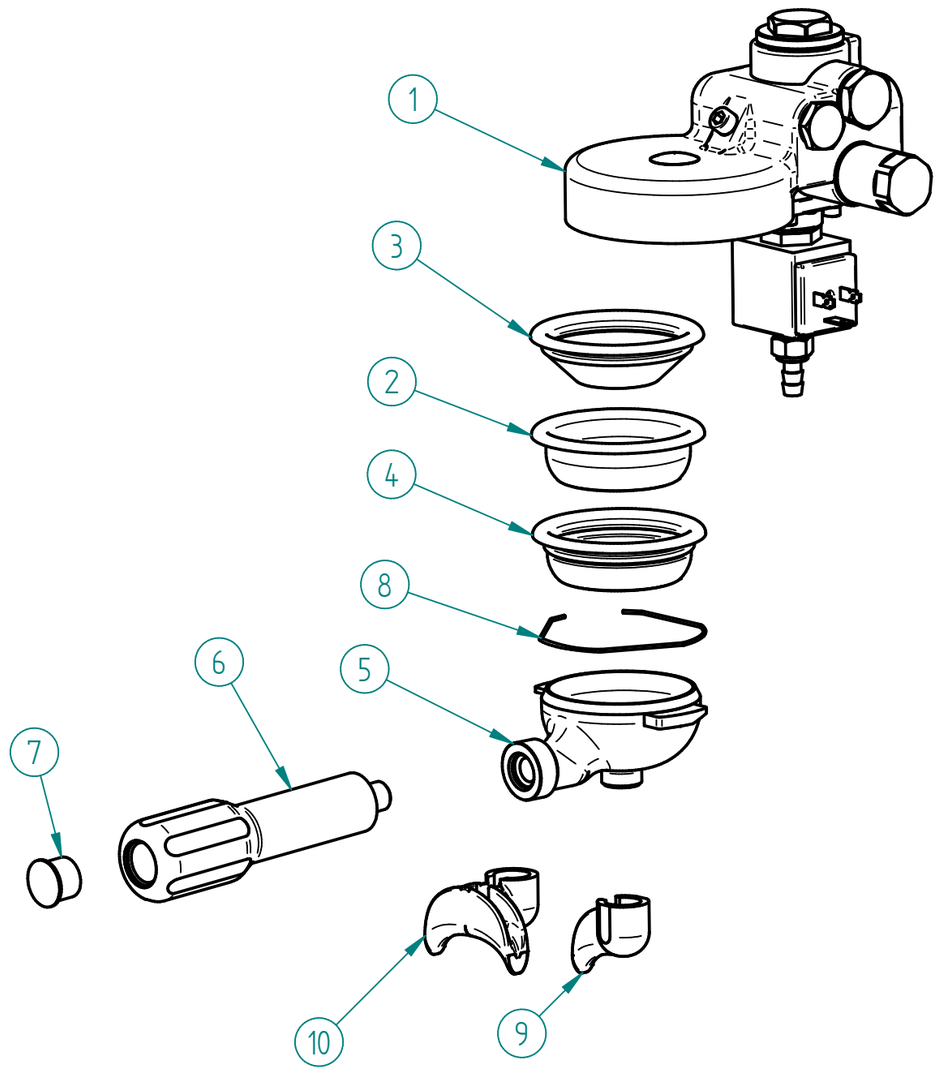

ITEM Nº	CÓDIGO	DESIGNAÇÃO	DESIGNATION	QUANT.
1	7.0.016.0080	GRUPO ECC-07 CONJ.	ECC-07 GROUP ASS.	1
2	5.0.000.0167	FILTRO CEGO	BLIND FILTER	1
3	5.0.000.0161	FILTRO 1 BICA CONICO FIAMMA	1 COFFEE FILTER FIAMMA	1
4	5.0.000.0173	FILTRO 2 BICAS 12 GR	2 COFFEES FILTER 12 GR	1
5	5.0.000.0657	PORTA FILTRO INCLIN. - FIX. 6 MM	FILTER HOLDER	1
6	5.0.000.0655	PUNHO PORTA FILTRO INCLIN.	HANDGRIP FOR FILTER HOLDER	1
7	5.0.000.0654	TAMPA PUNHO PORTA FILTRO INCLIN.	PLUG FOR HANDGRIP	1
8	5.0.000.0411	MOLA PORTA FILTRO 1,2MM	FILTER HOLDER SPRING	1
9	5.0.000.0104	DISTRIBUIDOR 1 BICA CURVO	1 COFFEE SPECIAL OUTLET	1
10	5.0.000.0106	DISTRIBUIDOR 2 BICAS	2 COFFEES OUTLET	1

CÓDIGO	DESIGNAÇÃO	DESIGNATION
5.0.000.0651	PORTA FILTRO M12 INCLIN. CONJ. - 1 BICA	1 COFFEE FILTER HOLDER ASS.
5.0.000.0652	PORTA FILTRO M12 INCLIN. CONJ. - 2 BICAS	2 COFFEE FILTER HOLDER ASS.
5.0.000.0668	PORTA FILTRO M12 INCLIN. CONJ. - CAPSULAS	CAPSULES FILTER HOLDER ASS.

1 - 7.0.016.0080 - GRUPO ECC-07 CONJ.

1 - GROUP ECC-07 ASS.

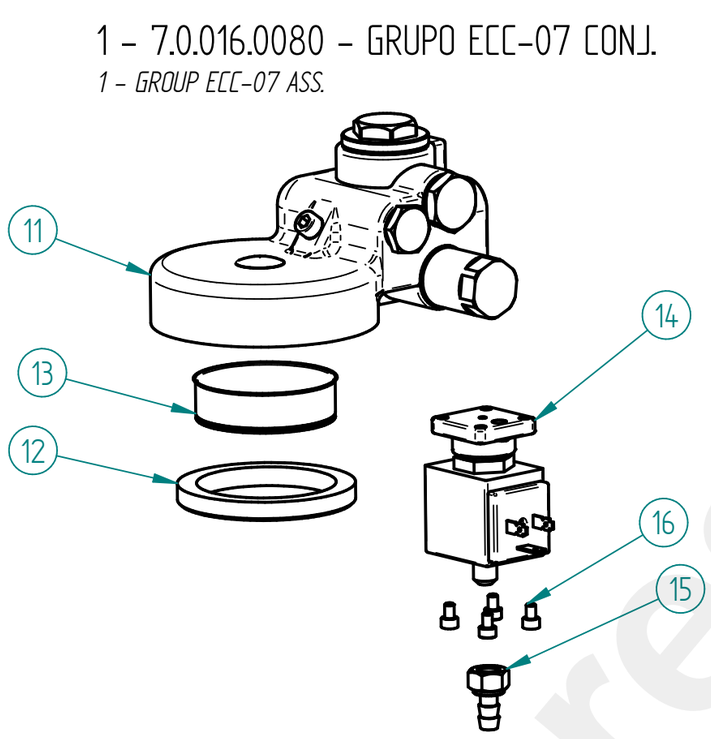

ITEM Nº	CÓDIGO	DESIGNAÇÃO	DESIGNATION	QUANT.
11	4.0.016.0000	GRUPO ECC-07	GROUP ECC-07	1
12	5.0.025.0012	JUNTA PORTA FILTRO 58X74X8,5MM (GR B-61/ECC-07)	FILTER HOLDER GASKET	1
13	5.0.025.0010	CRIVO GRUPO B-61/ECC-07	GROUP B-61 SIEVE	1
14	5.0.000.0123	ELECTROVALVULA 3 VIAS 230V - GRUPO	230V 3 WAY ELECTROVALVE GROUP	1
15	4.0.000.0198	RACORD DESCARGA ELECTROVALVULA	ELECTROVALVE DRAINAGE RACCORD	1
16	4.2.000.9606	PARAF. UMBRACO M4X6 INOX DIN912	M4X6 INOX DIN912 UMBRACO SCREW	4

11 - 4.0.016.0000 - GRUPO ECC-07

11 - GROUP ECC-07

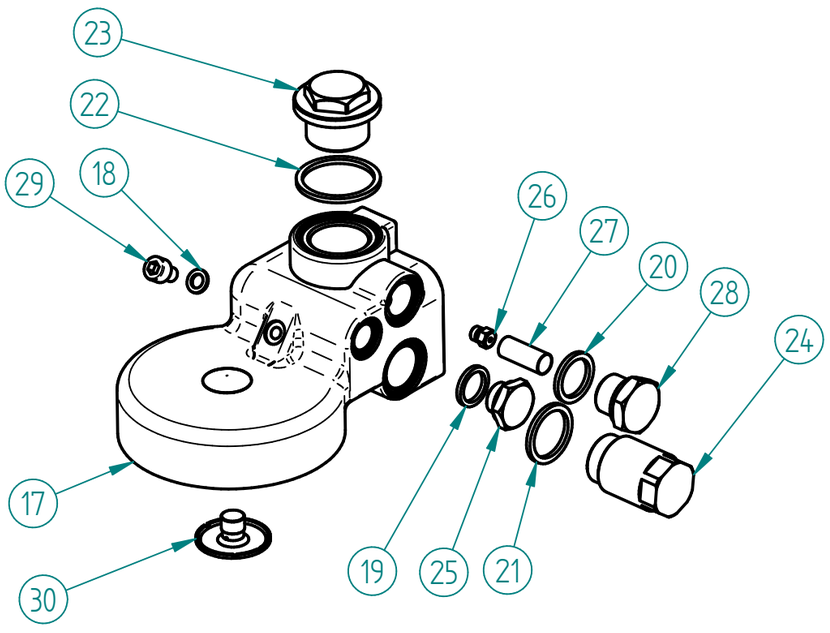

ITEM Nº	CODIGO	DESIGNAÇÃO	DESIGNATION	QUANT.
17	5.0.016.0100	CORPO GRUPO ECC-07	BODY OF THE GROUP ECC-07	1
18	5.0.025.0015	JUNTA TEFLON 10X6X1	TEFLON GASKET	1
19	5.0.000.0315	JUNTA TEFLON 18X13,5X2MM	TEFLON GASKET	1
20	5.0.025.0022	JUNTA TEFLON 22X17X2	TEFLON GASKET	1
21	5.0.016.0106	JUNTA TEFLON 26X 21X2	TEFLON GASKET	1
22	5.0.025.0002	JUNTA TEFLON 35X30X2	TEFLON GASKET	1
23	5.0.016.0102	TAMPAO SUPERIOR M26X1,5 CROM. GR ECC-07	UPPER CHROM. COVER M26X1,5 (GR ECC-07)	1
24	5.0.016.0105	INFUSOR GRUPO ECC-07	INFUSER OF GROUP ECC-07	1
25	5.0.016.0104	TAMPAO LATERAL G1/4 CROM. GR ECC-07	CHROM. SIDE COVER G1/4 (GR ECC-07)	1
26	5.0.016.0110	INJECTOR 0.7 M6X0,75 (GR ECC-07)	INJECTOR 0,7 M6X0,75 (GR ECC-07)	1
27	5.0.025.0023	FITRO INOX INJECTOR	GROUP GIGLEUR FILTER	1
28	5.0.025.0021	TAMPAO G3/8 CROM. (GR B-61/GR EC-07)	CHROM. COVER G3/8 (GR B-61/GR ECC-07)	1
29	5.0.025.0003	PARAFUSO UMBRACO M6X10 INOX (GR B-61/ECC-07)	FRONT INOX SCREW M6X10 OF THE GROUP B-61	1
30	5.0.025.0009	DISTRIBUIDOR GRUPO B-61/ECC-07	OUTLET GROUP B-61/ECC-07	1

20160523
TÜVRheinland CERTIFIED
Management System ISO 9001:2008
www.tuv.com ID 9108624282
fiamma
behind every great taste

Os elementos deste desenho podem ser alterados sem aviso prévio.
This drawing may be altered without previous notice.

MÁQ. CAFÉ QUADRANT 2 CV TC

ESPRESSO COFFEE MACHINE QUADRANT 2 CV TC

14 – PAINEL FRONTAL CONJ. QUADRANT 2 CV TC

14 – FRONT PANEL QUADRANT 2 CV TC

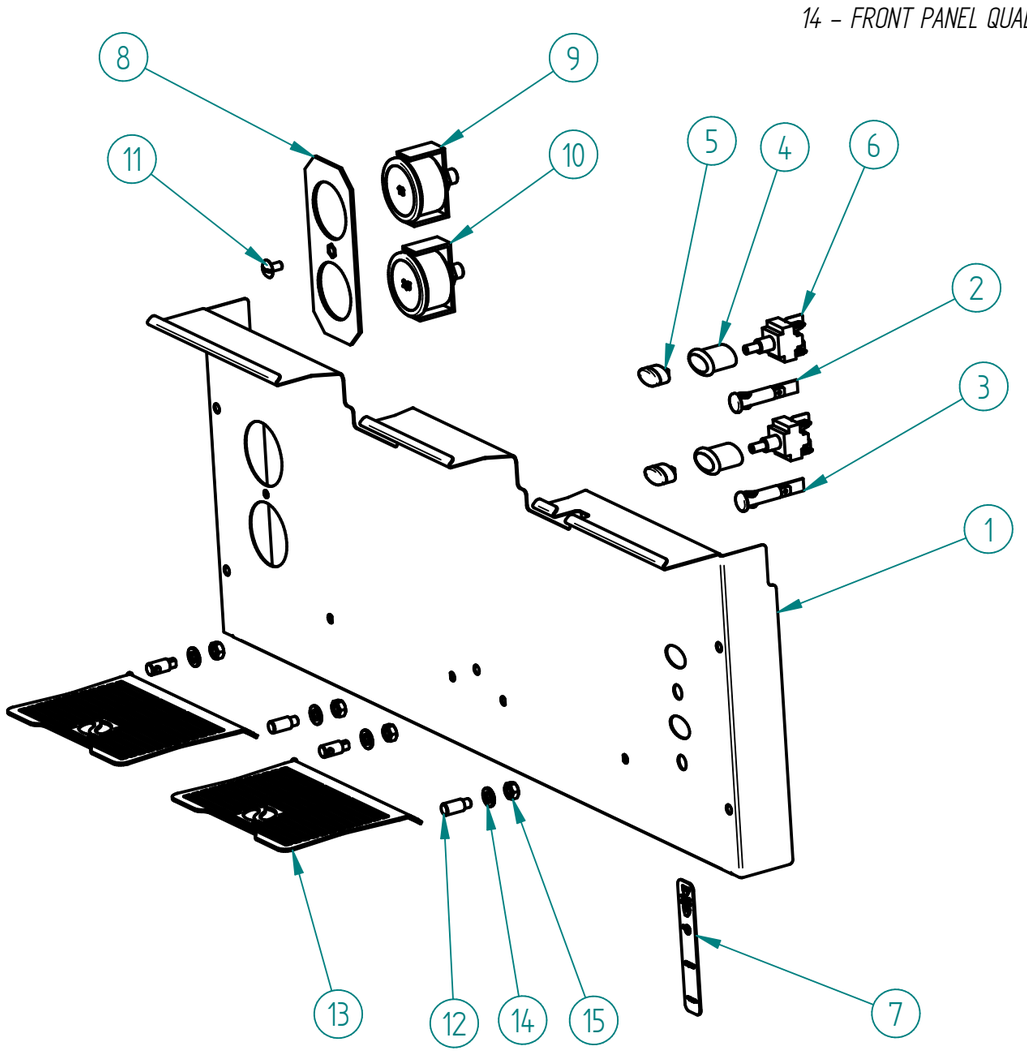

ITEM Nº	CÓDIGO	DESIGNAÇÃO	DESIGNATION	QUANT.
1	7.0.033.0021	PAINEL FRONTAL QUADRANT 2 TC	FRONT PANEL QUADRANT 2 TC	1
2	4.0.025.0130	SINALIZADOR VERDE Φ10MM TERM. MACHO	GREEN LED Φ10MM	1
3	4.0.025.0135	SINALIZADOR LARANJA Φ10MM TERM. MACHO	ORANGE LED Φ10MM	1
4	4.0.000.0503	CAIXA ELIPSE D16	BOX D16 ELIPSE	2
5	4.0.000.0507	TASTO ELIPSE D16	SWITCH KEY D16	2
6	4.0.000.0513	INTERRUPTOR BIPOLAR E0070	TWO POLES SWITCH E0070	2
7	4.0.007.0064	AUTOCOLANTE INTERRUPTOR GERAL COMPASS	COMPASS MAIN SWITCH DECAL	1
8	7.0.016.0204	SUPORTE MANÓMETROS ATLANTIC	ATLANTIC GAUGE SUPPORT	1
9	5.0.000.0391	MANOMETRO 0-16BAR	PRESSURE GAUGE 0-16BAR	1
10	5.0.000.0392	MANOMETRO 0-2,5BAR	PRESSURE GAUGE 0-2,5BAR	1
11	4.2.000.9116	PARAFUSO CAB. OVAL LARGA M5X10 NIQ	SCREW M5X10	1
12	7.0.016.2235	SUPORTE GRELHA CHAVENAS NV ATLANTIC TC	CUPS GRID SUPPORT	4
13	7.0.016.2237	GRELHA CHAVENAS NV ATLANTIC TALL CUPS	CUP'S GRID	2
14	4.2.000.9139	ANILHA RECART. M6 INOX DIN933	S/STEEL TOOTHED WASHER M6 DIN6798A	4
15	4.2.000.9181	PORCA M6 INOX DIN934	M6 NUT STAINLESS STEEL DIN934	4

17 – 7.0.033.0101 – CABO H07RN-F 3G2,5-1,8MT CONJ. MAQ. CAFE 2GR

17 -CABLE H07RN-F 3G2,5-1,8MT ASSEMB. 2GR

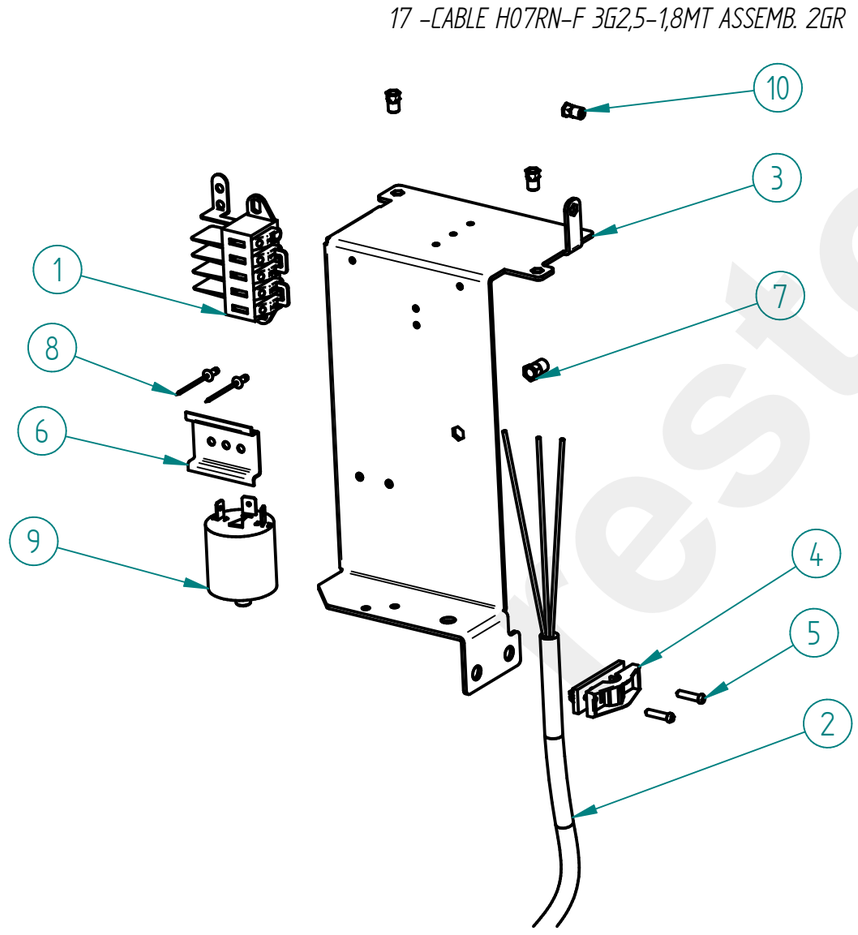

ITEM Nº	CÓDIGO	DESIGNAÇÃO	DESIGNATION	QUANT.
1	4.0.028.0015	LIGADOR RAPIDO 5 POLOS	FAST LINKER	1
2	4.0.125.0010	CABO H07 RN-F 3G2,5	CABLE H07RN-F 3G2,5	1
3	7.0.033.0051	SUPORTE LIGADOR QUADRANT	QUADRANT CONNECTOR SUPPORT	1
4	4.0.000.0495	CERRA CABOS PA 238	CABLE FASTENER PA238	1
5	4.2.000.9128	PARAFUSO ROSCA PLASTICO KB3,5X16 ZINC.	SCREW KB3,5X16	2
6	7.0.028.0083	SUPORTE CONTACTOR PACIFIC	PACIFIC CONTACTOR SUPPORT	1
7	4.2.000.9523	PORCA DE CRAVAR CAB. EMB. SEXT. M5	BLIND RIVET NUT HEX. SHAFT M5	1
8	4.2.000.9200	REBITE ALUMINIO 3X6	ALUMINIUM REVIT 3X6	2
9	4.0.000.0997	FILTRO EMC MAQ. CAFE	EMC FILTER COFFEE MACHINE	1
10	4.2.000.9522	PORCA DE CRAVAR CAB. EMB. SEXT. M4	BLIND RIVET NUT HEX. SHAFT M4	3

20 – CONTADOR VOLUMETRICO CONJ. MÁQ. 2GR / 3GR

20 – ASS. VOLUMETRIC DOSER COFFEE MACHINES 2GR / 3GR

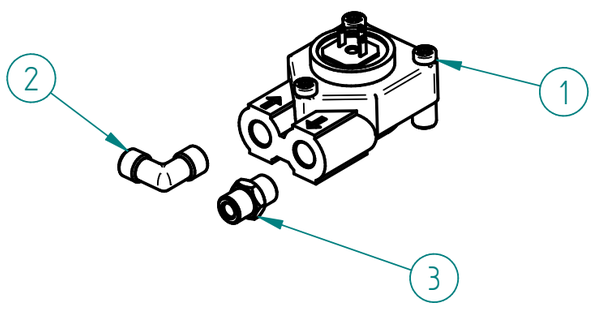

ITEM Nº	CÓDIGO	DESIGNAÇÃO	DESIGNATION	QUANT.
1	5.0.000.1012	CONTADOR VOLUMETRICO D1,15-G1/8 C/ LED	VOLUMETRIC DOSER D1,15-G1/8 W/ LED	1
2	5.0.000.0730	RACORD L G1/8-G1/8	RACORD L G1/8-G1/8	1
3	5.0.000.0725	RACORD G1/8-G1/8 NIQ.	RACORD G1/8-G1/8 NIQ.	1

20160523
TÜVRheinland CERTIFIED
Management System ISO 9001:2008
www.tuv.com ID 9108624282
fiamma
behind every great taste

Os elementos deste desenho podem ser alterados sem aviso prévio.
This drawing may be altered without previous notice.

MÁQ. CAFÉ QUADRANT 2 CV TC

ESPRESSO COFFEE MACHINE QUADRANT 2 CV TC

21 - 7.0.016.0065 - BLOCO ENTRADA AGUA ECC-07 (AUT.) CONJ.

21 - WATER INLET ASS.

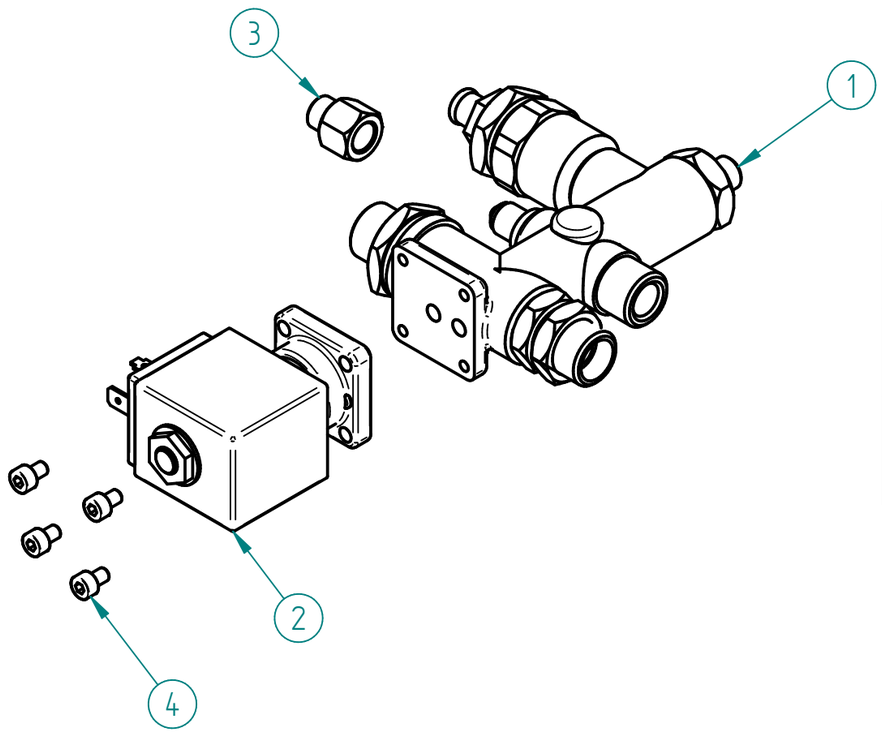

ITEM Nº	CÓDIGO	DESIGNAÇÃO	DESIGNATION	QUANT.
1	4.0.016.0010	BLOCO ENTRADA AGUA ECC-07 (AUT.)	WATER INLET ASS.	1
2	5.0.000.0124	ELECTROVAL. 2 VIAS 230V/50HZ-ENT. AGUA PARAL.	2 WAYS ELECTROVALVE	1
3	5.0.000.0715	RACORD G1/8-G1/8F NIQ.	RACORD G1/8-G1/8F NIQ.	1
4	4.2.000.9606	PARAF. UMBRACO M4X6 INOX DIN912	M4X6 INOX DIN912 UMBRACO SCREW	4

1 - 4.0.016.0010 - BLOCO ENTRADA AGUA ECC-07 (AUT.)

1 - WATER INLET ASS.

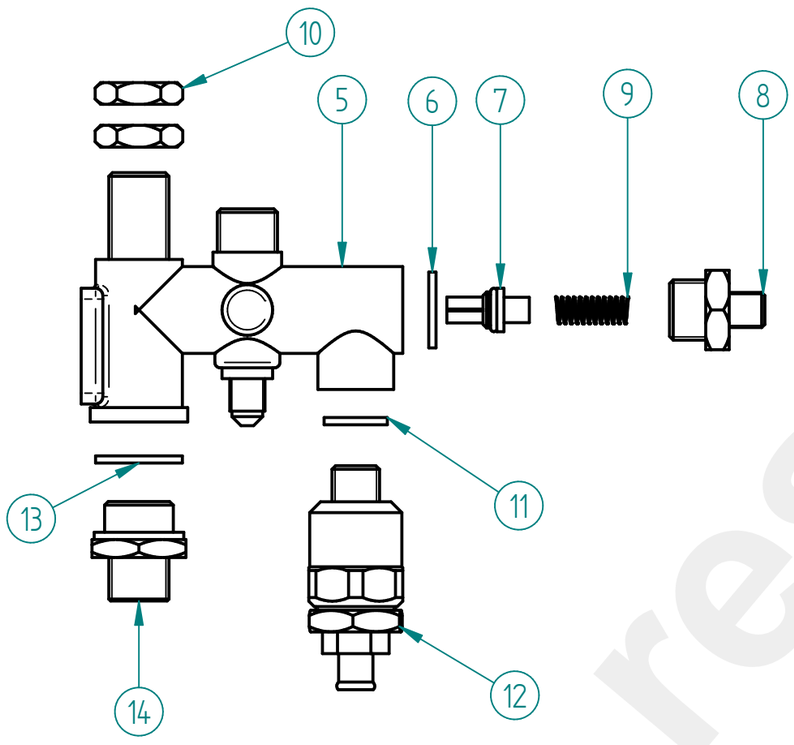

ITEM Nº	CODIGO	DESIGNAÇÃO	DESIGNATION	QUANT.
5	5.0.016.0200	CORPO BLOCO AUT. ECC-07	DISTRIBUTION GROUP BODY (AUT. ECC-07)	1
6	5.0.025.1386	JUNTA TEFLON 21X16,8X2	TEFLON GASKET	1
7	5.0.016.0231	VALVULA ANTI-RETORNO BLOCO ECC-07	ANTI-BACKFLOW VALVE	1
8	5.0.016.0235	RACORD G3-8 x G1-8 BLOCO ECC-07	RACORD G3/8XG1/8 (DISTRIB. GROUP ECC-07)	1
9	5.0.016.0234	MOLA VALVULA ANTI-RETORNO BLOCO ECC-07	ANTI-BACKFLOW VALVE SPRING	1
10	4.0.000.0045	PORCA G3/8 LATAO (SEXT. 21MM)	BRASS NUT G3/8 (21MM)	2
11	5.0.000.0315	JUNTA TEFLON 18X13,5X2MM	TEFLON GASKET	1
12	5.0.016.0220	VALVULA EXPANSAO BLOCO ECC-07	EXPANSION VALVE (DISTRIB. GROUP ECC-07)	1
13	5.0.016.0211	JUNTA TEFLON 24X19X2	TEFLON GASKET	1
14	5.0.016.0215	RACORD M20x1,5-G3/8 BLOCO ECC-07	RACORD M20X1,5-G3/8	1

8 - 5.0.016.0220 -VALVULA EXPANSÃO BLOCO ECC-07

8 - EXPANSION VALVE (DISTIB. GROUP ECC-07)

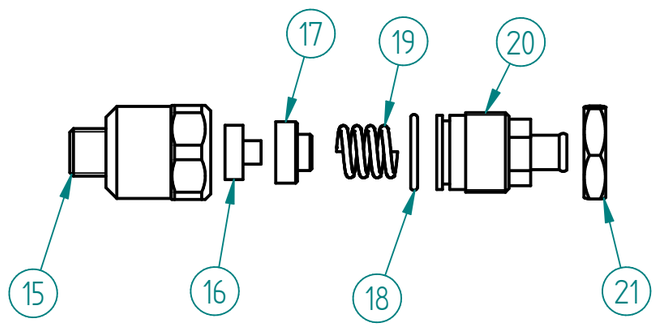

ITEM Nº	CODIGO	DESIGNAÇÃO	DESIGNATION	QUANT.
15	5.0.016.0222	CORPO VALVULA EXPAN. BLOCO ECC-07	EXPANSION VALVE BODY	1
16	5.0.016.0223	JUNTA VALVULA EXPAN. BLOCO ECC-07	EXPANSION VALVE GASKET	1
17	5.0.016.0224	SUPORTE JUNTA BLOCO ECC-07	GASKET HOLDER (DISTRIB. GROUP ECC-07)	1
18	5.0.016.0225	ORING 21X17X2	ORING 21X17X2	1
19	5.0.016.0214	MOLA 8-16KG BLOCO ECC-07	SPRING	1
20	5.0.016.0226	RACORD M22X1 VALVULA EXPAN. BLOCO ECC-07	RACORD M22X1- EXPANSION VALV.	1
21	5.0.016.0227	PORCA M22X1 LATAO	BRASS NUT M22X1	1

20160523
TÜVRheinland CERTIFIED
Management System ISO 9001:2008
www.tuv.com ID 9108624282
fiamma
behind every great taste

Os elementos deste desenho podem ser alterados sem aviso prévio.
This drawing may be altered without previous notice.

MÁQ. CAFÉ QUADRANT 2 CV TC

ESPRESSO COFFEE MACHINE QUADRANT 2 CV TC

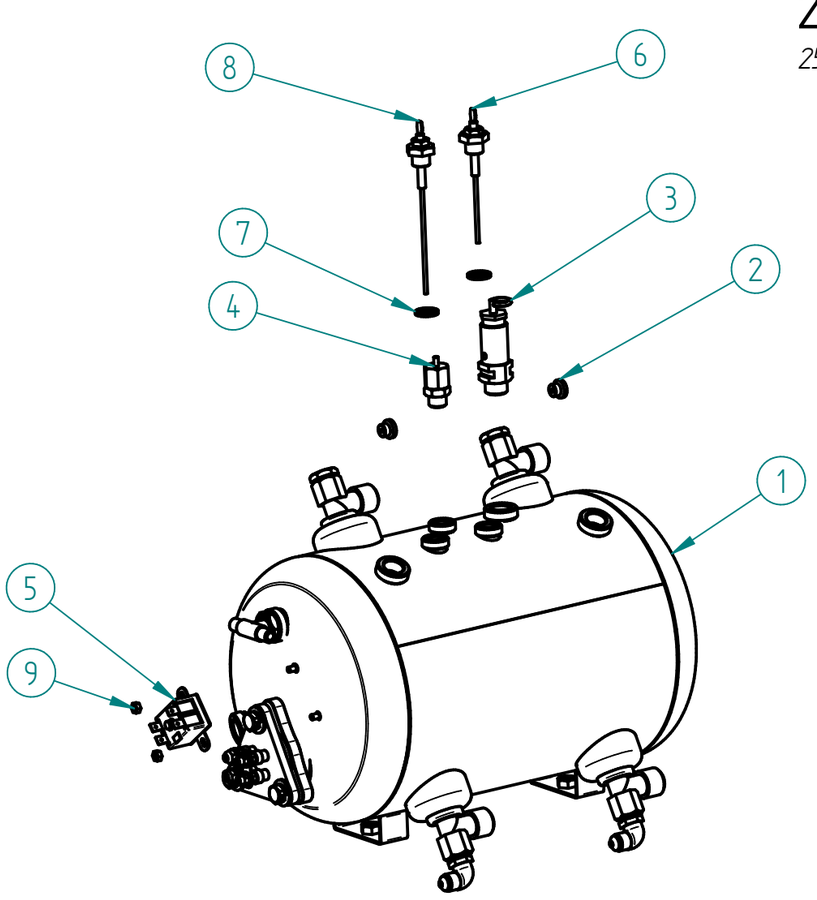

25 – CALDEIRA 11 LT C/ ACESSORIOS

25 – 11 LT BOILER W/ ACESS

ITEM Nº	CÓDIGO	DESIGNAÇÃO	DESIGNATION	QUANT.
1	7.0.000.0533	CALDEIRA 2 GR 11 LT C/ ACESSORIOS	2 GROUP 11LT BOILER W/ ACESS.	1
2	5.0.000.0748	REDUTOR CAUDAL 2,5MM	FLOW REDUCER 2,5MM	2
3	4.0.000.0051	VALVULA SEGURANÇA CALDEIRA	BOILER SECURITY VALVE	1
4	5.0.000.1002	VALVULA ANTI-VACUO	ANTI VACUUM VALVE	1
5	4.0.000.0250	TERMOSTATO SEGURANÇA 130º	SAFETY THERMOSTAT 130º	1
6	7.0.016.0070	SONDA ⌀2,5X105MM CONJ.	⌀2,5X105MM PROBE ASS.	1
7	5.0.000.0315	JUNTA TEFLON 18X13,5X2MM	TEFLON GASKET	2
8	7.0.025.0002	SONDA ⌀2,5X135MM CONJ.	⌀2,5X135MM PROBE ASS.	1
9	4.2.000.9184	PORCA M4 LATAO DIN934	BRASS M4 NUT DIN934	2

1 – 7.0.000.0533 – CALDEIRA 2GR 11 LT C/ ACESS.

1 – 2 GROUP 11 LT BOILER W/ ACESS.

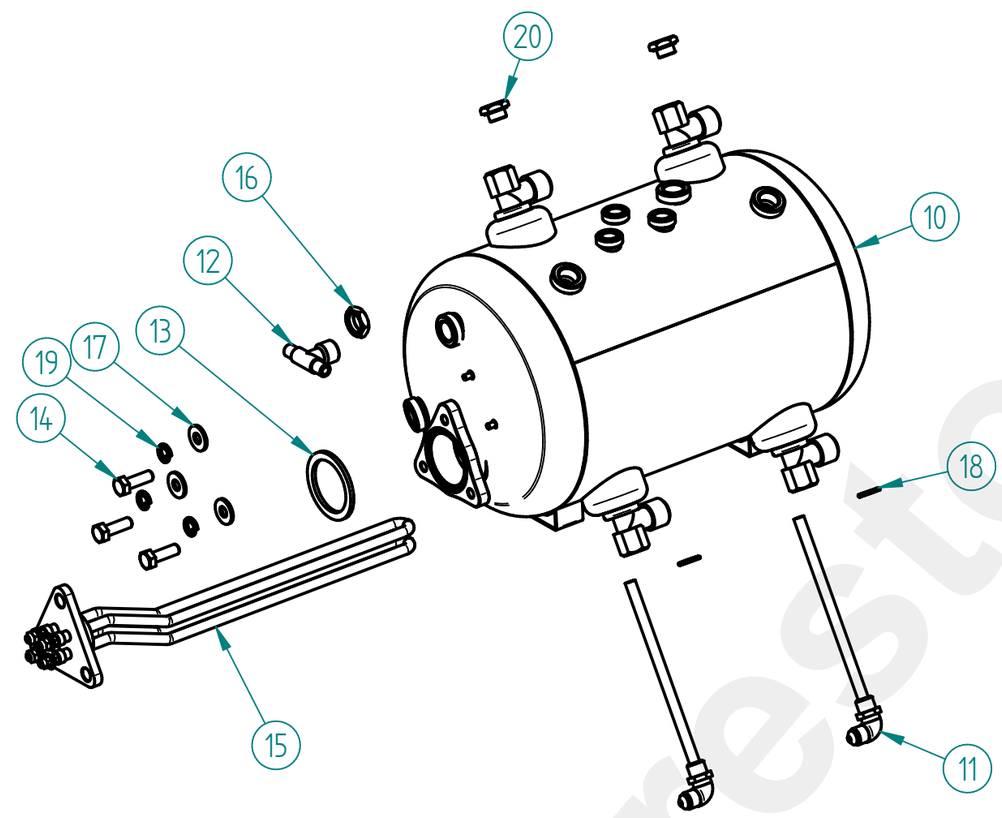

ITEM Nº	CÓDIGO	DESIGNAÇÃO	DESIGNATION	QUANT.
10	7.0.000.0547	CALDEIRA 2GR 11LT (RACORD SOLD.)	2 GROUP 11LT BOILER	1
11	7.0.000.0120	RACORD INJECTOR C/ TUBO	INJECTION RACORD W/ TUBE	2
12	4.0.000.0071	RACORD DUPLO G3/8-2XG1/8	DOUBLE RACCORD	1
13	5.0.000.0307	JUNTA RESISTENCIA REDONDA	HEATING ELEMENT GASKET	1
14	4.2.000.9086	PARAFUSO CAB. SEXT. M8X25 ZINC. DIN933	SCREW M8X25	3
15	5.0.000.0802	RESISTENCIA FLANGE TRIANG. 3500W 2GR	TRIANGULAR HEATING ELEMENT (3500 W)	1
16	4.0.000.0045	PORCA G3/8 LATAO (SEXT. 21MM)	BRASS NUT G3/8 (21MM)	1
17	7.2.000.0015	ANILHA PLANA 2X20X8,5 ZINC.	FLAT RING 2X20X8.5	3
18	4.0.000.0013	ANILHA 13x17MM (G1/4) COBRE	GASKET G1/4 CU	2
19	4.2.000.9147	ANILHA MOLA M8 ZINC. DIN127B	M8 SPRING WASHER	3
20	4.0.000.0151	TAMPAO G1/4 LATAO	BRASS COVER G1/4	2

32 – 7.0.016.0060 – MOTOR BOMBA CONJ.

32- PUMP-MOTOR ASS.

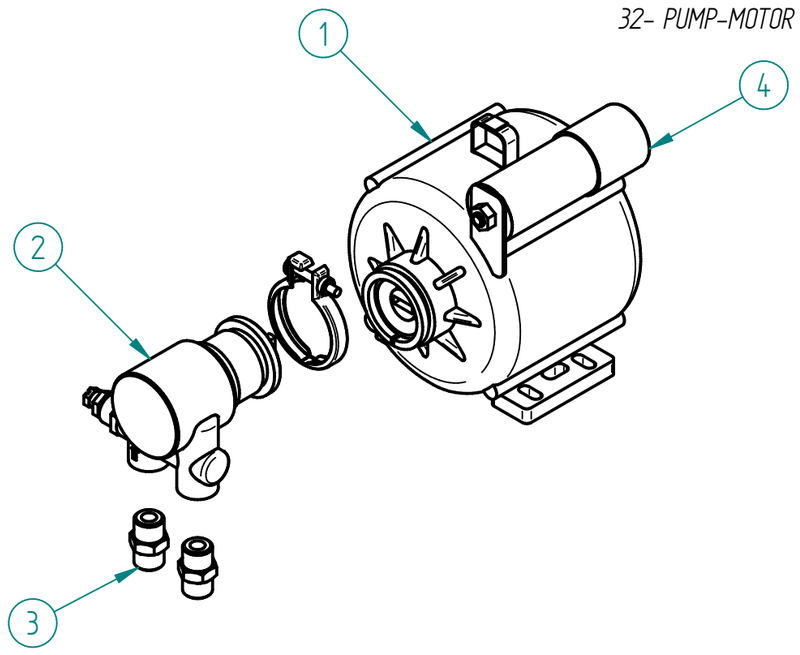

ITEM Nº	CÓDIGO	DESIGNAÇÃO	DESIGNATION	QUANT.
1	5.0.000.0460	MOTOR 230V/50HZ	MOTOR 230V 50HZ	1
2	5.0.000.0040	BOMBA AGUA	WATER PUMP	1
3	4.0.000.0115	RACORD G3/8-G3/8 (BOMBA)	PUMP'S METAL SLEEVE	2
4	5.0.000.0468	CONDENSADOR 10uF (Φ35 FIX. M8)	CAPACITOR 10uF (Φ35 FIX. M8)	1

20160523

Management System ISO 9001:2008
TÜVRheinland CERTIFIED
www.tuv.com ID 9108624282

fiamma
behind every great taste

Os elementos deste desenho podem ser alterados sem aviso prévio.
This drawing may be altered without previous notice.

R00

ESQUEMA ELECTRICO
Electric Scheme

MÁQ. CAFÉ QUADRANT 2 CV TC

ESPRESSO COFFEE MACHINE QUADRANT 2 CV TC

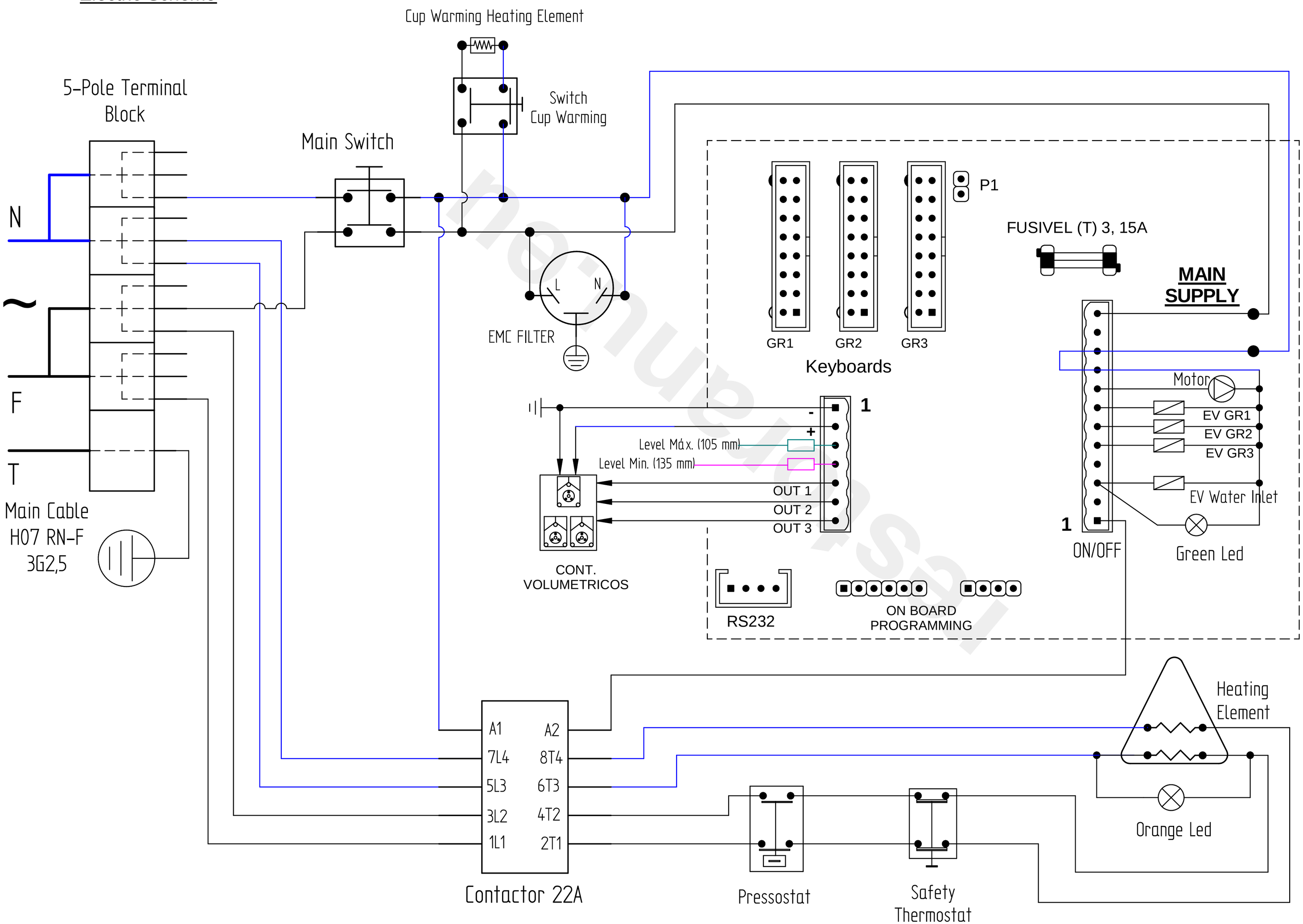

Os elementos deste desenho podem ser alterados sem aviso prévio.
This drawing may be altered without previous notice.

fiama
Behind every great taste
Management System ISO 9001:2008
www.tuv.com ID 9108624282
TÜVRheinland CERTIFIED
20160523
MB „Restoranų įranga" · Vilo Gerulaičio 1-59, LT-08200 Vilnius · +370 614 89888 · info@restoranu.eu · www.restoranu.eu