Tritacarne

Manuale delle istruzione per l'uso

MODELLO	TS 12 TI 12	TS 22 TI 22	TSK 12 TIK 12	TSK 22 TIK 22	TS 32 ECO TI 32 ECO	TI 12R TI 22R TI 32R	TI22RS TI32RS

GB	MEAT MINCER	OPERATING MANUAL
E	PICADORA	MANUAL DE INSTRUCCION
F	HACHOIR	MANUEL D'UTILIZATION
D	FLEISCHWOLF	BEDIENUNGSANLEITUNG
RUS	МЯСОРУБКА	РУКОВОДСТВО ПО ИСПОЛЬЗОВАНИЮ

INDEX

CHAP. 1.	CONTENT ORGANIZATION AND CONSULTATION MODALITY	3
CHAP. 2.	GENERAL INFORMATION AND CHARACTERISTICS	4
CHAP. 3.	SAFETY INSTRUCTIONS	8
CHAP. 4.	TRANSPORTATION, PUT ON SERVICE AND USE	9
CHAP. 5.	MAINTENANCE, BREAKS RESEARCH AND CLEANING	14
CHAP. 6.	SELLING	17
CHAP. 7.	MANUFACTURING MATERIALS	17
CHAP. 8.	OPTIONAL	18

GUARANTEE

The machine is guaranteed 12 (twelve) months from the sale date.
The guarantee covers the machines reparations acquired c/o the authorized sale points, if it is demonstrated that they are faulty in the materials or in the assembly, to the conditions here follow described:

1. For guarantee gets on the free change of all parts that are resulted manufacturing defect. The guarantee decades if not coupled from fiscal ticket or invoice certifying the purchase and for the following cases:
   a. Machine tampering or damaging due to negligence;
   b. Machine use with non conformance modalities to the warnings described in the instructions handbook;
   c. Damages caused from the non environment suitability in which the device works and from phenomenon not dependent from the machine normal functioning (voltage values irregularities and frequency in the net plant);
   d. Reparations interventions performed from people or centers not authorized from the manufacturer,
2. The intervention request in guarantee will have to be performed only in the sale points or authorized laboratories;
3. The machine will have to be free port returned to the manufacturer for the reparation and the transportation expenses are always charged to the receiver,
4. It is excluded the machine change nor the guarantee prolongation following the intervention for damage;
5. The manufacturer doesn't answer for direct or indirect damages of any nature to people or things for the improper use of the machine or for lacked use during the time occurring for the reparations.

MODEL	**TS 12 / TI 12 / TS 22 / TI 22 / TSK 12 / TIK 12 / TSK 22 / TIK 22 / TS 32 ECO / TI 32 ECO / TI 12R / TI 22R / TI 22RS / TI 32R / TI32RS**

Use Instructions Manual	
Issue	**July 2019**

CHAP. 1. CONTENT ORGANIZATION AND CONSULTATION MODALITY

MANUAL PURPOSE

MANUAL IMPORTANCE

The present instruction manual for the use is to be considered as **integral part of the machine**:

1. Must be kept for all the machine life.
2. Must be coupled with the machine in case of its ceasing.
3. Besides to show all useful notices for the operators, contains (collected in specific chapters) the electric diagrams that will be used for the possible maintenance interventions and reparation.

SCOPE / MANUAL PURPOSE

The instructions manual for the use **has the purpose** to furnish to the commitment all necessary information so that, except of an adequate supplied machine use, is able to manage the same in the more autonomous way and possibly safe.
Besides the present manual has been written with the purpose to supply **indications and warnings** to know the supplied machine, to understand its principles and functioning limits. For possible doubts you can call the Authorized Assistance Center.

RECEIVERS

The present instruction manual for the use, delivered in number of 1 copy together with the machine, is supplied as integral part of the machine, is turned both to the operators both to the skilled technicians qualified to the installation, use and maintenance.

The prevention and protection service responsible of the commitment and **the additional employees**, to whom is assigned the machine, must take vision of the present instructions manual for the use, with the aim to adopt all technical and organizational measures

RESPONSIBILITY

- If the present manual endures damages or is lost, it is possible to request a copy to the Authorized Assistance Center.
- The present manual reflects the technical state during the machine manufacturing; the manufacturer reserves the right to update the production and of consequence other manual issues, without the obligation to update productions or previous manuals, if not in particular cases regarding the health and the people safety.
- Pay particularly attention to the residual risks content present on the machine and the prescriptions to which the operators must keep**.**
- The manufacturer is the responsible for the machine in its original configuration.
- The manufacturer isn't the responsible for damages caused from the improper use or not correct of the machine and documentation or for damages caused from the imperative standards violation, negligence, lack of experience, imprudence and the not respect of regulation standards on behalf of the employer, of the operator or the maintenance man and for every possible damage, caused from an irrational, improper and/or wrong use.
- The manufacturer isn't the responsible for the consequences caused from the not original spare parts use or of equal characteristics.
- The manufacturer is the responsible only for the information showed in the manual original version in Italian language.
- The prescriptions non-fulfillment contained in this manual will cause the guarantee immediate decay.

The factory responsibles, that supervision to the working activities, in the field of the foreseen respective attributions and competence, must:

- Carry out the foreseen safety measures;
- Make informed the operators about the specific risks whom are exposed and bring to their knowledge the prevention essential standards;
- Prepare and require that the single operators observe the safety standards and use the protection means put at their disposal:
- Work an operator, contemporary, on this product.

SIMBOLOGY MEANING

Here follow it is clearly specified the symbols and definitions meaning, which will be used in the present document.

DANGER
Show the danger presence for who works on the machine and for who is in the vicinity, so the indicated activity must be performed in accordance with the actual accident prevention standards and with the indications showed in the present manual

PRECAUTION
Show a warning on useful information and/or further recommendations and/or shrewdness about the actual operation.

ATTENTION
Show an operation to perform with attention to avoid damage to the machine.

CHAP. 2. GENERAL INFORMATION AND CHARACTERISTICS

USE DESTINATION AND MANUFACTURE PARTS

Meat mincer designed to be used with plate holes diameter smaller or equal to 8mm.

The mincer – grater, here follow is called "machine", è designed to mince, reduce of size **fresh meat not frozen, through cutting tools** to obtain meat sauce, hamburgers, meatballs and sausages. The meat must be without bones, or other parts of different consistency from the meat.
With the grater group placed on the opposite side of the machine, to **grater tough cheese, bread and biscuits**.
The machine is constituted from an electric motor inserted in a unique merger (basic machine body). In some versions the merger can be recovered from a bonnet (hulled machine body).
The meat to grind, is loaded manually in the load hopper, placed in the superior zone of the machine and always manually and with the pestle help is introduced in the grinding neck towards the Archimedean screw.
The hopper is blocked to the machine neck. The pestle is of plastic material suitable for the contact with food products.
The grinding group is of different typologies: Enterprise it comes with 6mm plate holes diameter, Half Unger, Total Unger.
The plate in turn is pressed against the cutter from the wheel inserted on the grinding group mouth.
The grinding group is dismanteable, all direct contact materials with the food material are in conformance with the actual hygienic standards for food.

In accordance with the functioning requirements and production, the machine can be constituted with different optional parts.

The machine is supplied with the identification plate on which the following data are showed:

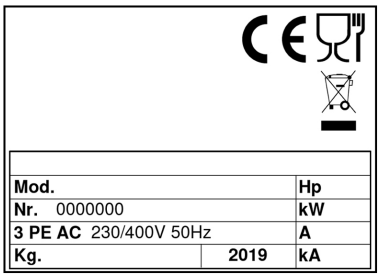

[fac simile]

TECHNICAL AND MANUFACTURING DATA

TECHNICAL DATA	MODEL				
	TS 12	TS 22	TSK 12	TSK 22	TS32 ECO
Motor power (kW) /(Hp)	0.75/ 1	1.1/ 1,5	0.75/ 1	1.1/ 1,5	1,5/2
Grinding mouth internal size (mm)	70	82	70	82	98
Timetable production (kg/h)	150/ 200	300	150/ 200	300	400
Mass (kg)	19	22	21	23	31
Maximum sizes: A x B x C (mm)	370x 220x 440	440x 240x 510	440x 220x 440	490x 240x 500	500x 240x 510

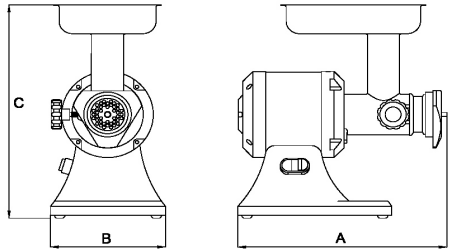

TECHNICAL DATA	MODEL									
	TI 12	TI 22	TIK 12	TIK 22	TI32 ECO	TI 12R	TI 22R	TI 22RS	TI 32RS	TI 32R
Motor power (kW) /(Hp)	0.75/ 1	1.1/ 1,5	0.75/ 1	1.1/ 1,5	1,5/2	1,1/1,5	1,5/2	1,5/2	1,6/2,2	2,2/3
Grinding mouth internal size (mm)	70	82	70	82	98	70	82	82	98	98
Timetable production (kg/h)	150/ 200	300	150/200	300	400	250	350/400	400/450	500	600
Mass (kg)	19	22	23	25	35	26	31	35	40	50
Maximum sizes: A x B x C (mm)	430x 215x 440	440x 215x 440	480x 215x 430	490x 215x 430	500x 225x 510	400x 260x 490	450x 260x 530	435x 260x 525	510x 260x 525	475x 300x 560

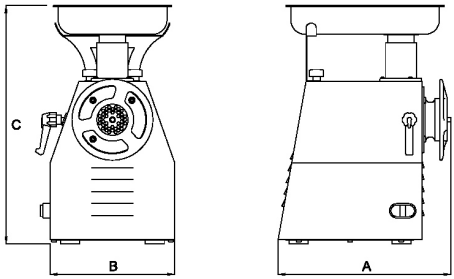

Continue acoustic power level considered equal to A	Minor of 70dBA
Current nature – Frequency	Macchine plate
Full charge current	Macchine plate
Use nominal voltage	Macchine plate
Auxiliary circuits voltage	AC 24V – DC 24V
Mass and neutral	TT e TN
Protection degree	IP X3
Use place	Inside
Machine positioning	**Working ground used in the food field** of height included between **900/1100mm** from the trampling level of adequate capacity, with a free circulation space of at least **800mm**
Environment air max temperature	+40°C
Requested minimum illumination	500 lux
Product directive conformance	**2006/42/CE, Reg.1935/2004 e Reg.2023/2006**

GROUP	MODEL														
	TS 12	TI 12	TS 22	TI 22	TSK 12	TIK 12	TSK 22	TIK 22	TS32 ECO	TI32 ECO	TI 12R	TI 22R	TI 22RS	TI 32RS	TI 32R
Basic machine body	●		●		●		●		●						
Hulled machine body (I)		●		●		●		●		●	●	●	●	●	●
Grinding group Enterprise	●	●	●	●	●	●	●	●	●	●	●	●	●	●	●
Grinding group half Unger	●	●	●	●							●	●			
Grinding group total Unger			●	●								●		●	●
Grinding group Enterprise (Uniko)					●	●	●	●	●	●					
Optional tomato masher	●	●	●	●							●	●			
Optional puree masher	●	●	●	●							●	●			

GROUP	EXAMPLE
1. Loading hopper 2. Machine body 3. Control switch ON / OFF 4. Mouth block knob 5. Blockage wheel 6. Machine	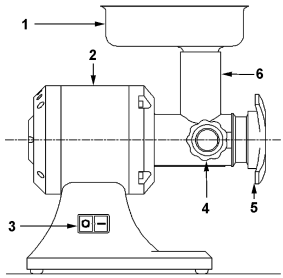 **Basic machine body** 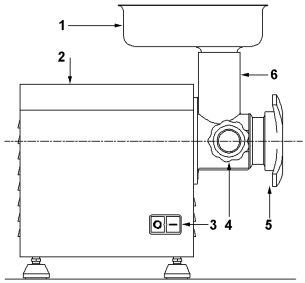 **hulled machine body (I)**
Grinding group Enterprise 1.Grinding mouth 2. Archimedean screw 3. Cutting knife 4. Drilled plate 5. Blockage wheel	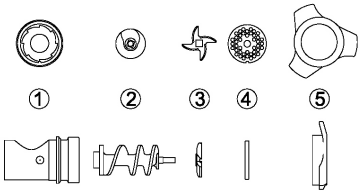
Grinding group half Unger 1.Grinding mouth 2. Archimedean screw 3. First Drilled plate 4. Cutting knife 5. Second Drilled plate 6. Blockage wheel	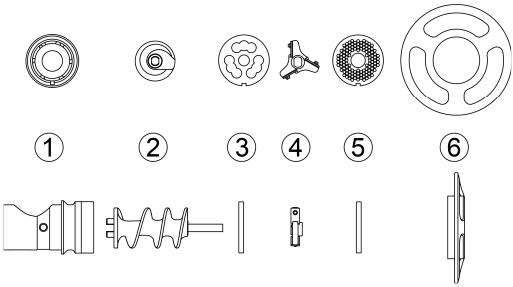

Grinding group total Unger 1.Grinding mouth 2. Archimedean screw 3. First Drilled plate 4. First cutting knife 5. Second Drilled plate 6. First cutting knife 7. Third Drilled plate 8. Blockage wheel	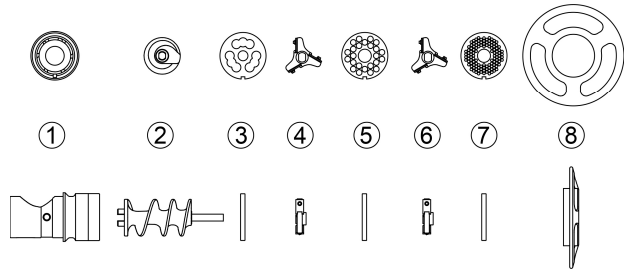
Grinding group Enterprise (Uniko) 1. Grinding mouth 2. Archimedean screw 3. Cutting knife 4. Drilled plate 5. Blockage wheel	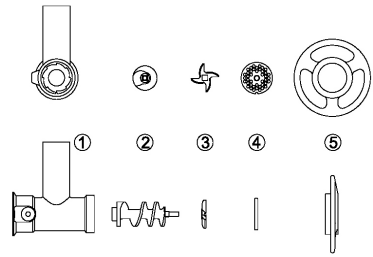

NORMAL USE, IMPROPER USE, NOT CORRECT USE OR FORBIDDEN

The machine described in the present instructions manual for the use is foreseen to be driven **from an only operator** skilled and prepared on residual risks, but with the competence, in safety matter, of maintenance employees.

In its **NORMAL USE**, and **reasonably** foreseeable, the machine can be used only to mince, reduce of size **fresh meat not frozen or not surgelata, through cutting tools** The meat must be without bones or other parts of consistency different from the meat.

The machine must not be used **IN IMPROPER WAY**; in particular:

1. It must not be used for domestic uses,
2. It must not functioned with parameters different from those showed in the technical characteristics table,
3. For every use of the machine with modalities different from those showed in the present manual, the manufacturer declines every responsibility,
4. The user is responsible of the damages resulting from the lacked exercise conditions observance in accordance with the greed technical specifications and order confirmation,
5. **don't let function the vacuum machine**,
6. Not tamper or damage intentionally nor remove or hide the labels.

The machine must not be used **IN NOT CORRECT WAY or FORBIDDEN** so some damages or injuries could be caused for the operator; in particular:

1. It is forbidden **to move the machine** when it is connected to the electric feeding;
2. It is forbidden **to draw the electric feeding cable or the machine** to disconnect the feeding plug,
3. It is forbidden to **put weights** on the machine or on the electric feeding cable,
4. It is forbidden to **put the electric feeding cable** on sharp parts or with burn danger,
5. It is forbidden the machine use with the damaged and not integer **electric feeding cable or with the control devices**;
6. It is forbidden to **leave the machine off** with the electric feeding cable connected with the feeding plug,
7. It is forbidden to **leave the loaded machine unguarded**;
8. It is forbidden to **insert any type of object** inside the motor ventilation cap;
9. It is forbidden to **put the machine above different objects from the working ground** used in the food field of height included between 900 - 1100mm from the **trampling level**,
10. It is forbidden **insert every type of object** under the machine base or place clothes or other things between the machine support pressure feet and the working ground,
11. It is forbidden the **use of inflammable substances, corrosive or harmful for the cleaning**,
12. It is forbidden to **plunge the machine** in water or in other liquids;
13. It is forbidden the **not authorized personnel use** and with clothes different from that showed for the use,
14. It is forbidden to **introduce in the grinding neck and in the grater mouth, products or objects having characteristics** different from those showed in the normal use, such as for example bones, frozen meat, not food products, or other objects as scarves, etc…,

15. It is forbidden **to remove the hopper during** the machine working or however when the food product has been left to work,
16. It is forbidden to **slacken the mouth block knob or the blockage wheel** both during the working and however **before of 5 sec** from the machine stop control,
17. It is forbidden the functioning **with the protection shelters and fixes not blocked correctly or removed**;
18. It is forbidden the **partial removal** of the protections and of the danger signals.
19. It is forbidden the functioning without that all the **precautions about the residual risks elimination** have been adopted on behalf of the user,
20. It is forbidden to **smoke or use free flame devices** and manipulate incandescent materials, unless some suitable safety measures aren't adopted,
21. It is forbidden to work or **regulate the control and blockage devices as knobs or similar** both during the machine functioning, both if you aren't authorized
22. **the use of plates with holes diameter bigger than 8mm is forbidden.**

The user is however responsible of the damages resulting from the lacked observance of the specified normal use conditions. For possible doubts you can enquire at the Authorized Assistance Center.

CHAP. 3. SAFETY INSTRUCTIONS

INTRODUCTION

The lacked standards and safety procedures applications can be danger and damage sources.
The machine means bound in the use for the respect, on behalf of the final user, of:

1. all rules, of insertion in the environment and of people behavior, fixed from the laws and/or applicable standards; with particular reference to the fixed plant upstream of the supplied machine and for its connection / functioning;
2. All further instructions and use warnings making part of the technical / graphic documentation annexed to the same machine.

Except where differently specified, the **personnel which performs the installation interventions, connection, maintenance, reassembly, and reuse, damages or breakdowns, demolition and dismantling** must be a **skilled personnel** qualified in safety matter and educated on the residual risks, with the competencies, in safety matter, of the maintenance employees.

ENVIRONMENTS, WORKING AND PASSING PLACES

The work environment must answer to the directive 89/654/CEE requirements. In the working area foreign object must not be present. **The employer**, in the directive 89/391/CEE respect, concerning the measures realization turned to promote the safety and workers health improvement during the work, must provide to eliminate or reduce the showed residual risks as foreseen in the present manual.

WARNINGS ON THE RESIDUAL RISKS

RESIDUAL RISK DUE TO THE FIXED PROTECTIONS REMOVAL, INTERVENTIONS ON BROKEN/WORN PARTS

For any **evenience the operator must not try to open or remove a fixed protection or tamper a safety device.**

In the phase of **equipment**, **maintenance** and **cleaning**, and **during all further manual operations** that happens introducing the hands or other body parts in the machine dangerous areas, a residual risk remains due above all to:

1. **Knocks with machine manufacturing parts,**
2. **Grazing and/or abrasion with machine rough parts,**
3. **Cut with tools sharpened parts.**

Besides, the operator and the maintenance man **must be skilled for the intervention connected to the manual operations with open protections**, must be trained on the joined consequent risks and must be authorized from a responsible person.

PROTECTION DEVICES ON THE MACHINE

The machine protections and safety devices must not be removed.
If they must be removed for extraordinary maintenance requirements **some measures will have to be immediately adopted ready to put in evidence and to reduce at the possible minimum limit the danger. The putting back in its place** of the protection or of the safety device must happen as soon as the reasons, that have made necessary their temporary removal, are stopped.

The machine transmission parts are completely isolated by means of fixed protections which don't allow the access for none kinematical chain.
Taking into account of the machine use modality and its use destination, the moving elements aren't isolated from fixed protections, moving protections or other safety devices.
The grinding group parts result placed at some distances from the access points such for which some dangerous points aren't reachable.
For all **safety functions** including the control and check systems parts joined to the safety, some well-tested components and safety principles have been used.

CHAP. 4. TRANSPORTATION, PUT ON SERVICE AND USE

The machine management is allowed only to the authorized personnel and opportunely educated and endowed of a sufficient technical experience.

Before to switch on the machine perform the following operations:

- Read with attention the technical documentation,
- Know what protections and emergency devices are available on the machine, their location and functioning.

The not authorized use of commercial parts and accessories making part of the protections and safety devices can cause some malfunctions and the ranger situation beginning for the operators.

The operator must besides have received an adequate training.

WORKING POSITIONS AND OPERATORS TASKS

As described in the instructions manual for the use, the machine is designed to be driven from an **operator** skilled and informed on the residual risks, but with the competences, in safety matter, of the maintenance employees.

The normal working zone of the operator is:

1. The machine lateral zone near the hopper (defined loading zone) in normal conditions of functioning for the food product manual loading operations in the hopper and during the pestle use to direct the food product inside the machine neck, with the fixed protections in closed and blocked position;
2. The machine anterior zone near the food product unloading zone in normal conditions functioning for the food product manual drawing operations stored in a proper container, with the fixed protections in closed and blocked position

TRANSPORTATION, HANDLING AND STORING

All transportation and handling operations must be performed from informed and trained personnel and must have read and understood the safety prescriptions showed in the present instructions manual for the use. Occur:

1. Perform the machine handling and transportation always when you find it uncharged**;**
2. Verify that the lifting means are able to support the loading weight and overall dimensions in safety conditions and that are approved and subjected to a regular maintenance,
3. Adopt all necessary measures to assure the means and loads maximum stability in relation to their masses and barycentre,
4. Avoid to make suffer to the machine rude shaker or accidental collisions during the moving and the loading,
5. Perform the handling with continue movements, without pulls or repeated impulses.

PACKING REMOVAL – OPENING MODALITY

PACKING DECRIPTION – HOW GET RID OF THE PACKING MATERIAL

The machines are packaged so that the seepage / liquids insight, organic matters or alive beings is avoided: it is represented from a **covering in polyethylene around the machine**, and all inserted in a **cardboard box** of adequate size. The empty spaces within the box are occupied from the **fill material**.

Don't waste the packaging in the environment, but restore it for possible transportations or to address it to the recycling agencies.
The evaluation and the management with the aims of the biological compatibility of the products used in the packaging, are of the user competence and responsibility.

It is an employer obligation **to be acquainted of the actual laws in own country and work so that to observe these legislations.**

It is forbidden and besides liable to fines, leave the machine and the electric equipment in the environment.

PREPARATION PRELIMINARY OPERATIONS

STABILITY

The machine stability is designed so that, in the foreseen functioning conditions, taking into account of the climatic conditions, is such as to allow the use **without reversal risk, fall,** or **inopportune movement**.
Taking into account of the conformation and its position, the machine results to be intrinsically steady without fastening needs to the working ground.

ELECTRIC FEEDING

The electric feeding connection must be in conformance with the **country legislation in which is used**.
The electric feeding so must be maintained in conformance with the following technical prescriptions:

1. **The electric feeding** must be always of type and have an intensity corresponding to the specifications indicated in the machine plate. If excessive voltages are applied, some components will be damaged **irreparably**,
2. **A differential device must be foreseen** coordinated with the protection circuit, respecting the legislation, the legislative and regulated disposals in force in the installation country;
3. **The electric feeding cable outside the machine cover** must be made pass in the spaces prepared from You and adequately protected;
4. If present **the neutral conductor (N)** before feeding the electric equipment, as for You its continuity must be guaranteed (connected and available).
5. Before to feed the electric equipment, as for You must be guaranteed the continuity of the green yellow conductor of the protection equipotential circuit.

ELECTRIC FEEDING SECTIONING DEVICE

The feeding sectioning device, as comparable from what described in the power circuits diagram delivered with the electric equipment, is supplied for the **machine feeding** unique source**.**
In case of incompatibility between the net socket and the device plug **change the socket with another type suitable from maintenance personnel.**
The feeding sectioning device allows to **separate (insulate) the machine electric equipment** from the feeding, with the aim to make possible the interventions **performing** without electric shocks risks.
The sectioning device presents two possible positions:

	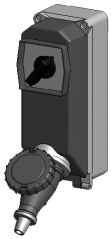
OFF o “disconnected”, the electric equipment results sectioned from the electric feeding	ON o “connected”, the electric equipment results connected to the electric feeding

GRINDING GROUP ASSEMBLY / DISASSEMBLY

The assembly / disassembly operations of any machine part **are performed with the stop machine and with the plug disconnected from the socket**, or with the sectioning device in OFF.

The grinding groups that can be foreseen, in accordance with the working requirements, can be: **Enterprise**, **half Unger** and **total Unger**.
The **grinding group Enterprise** assembly on the machine takes place in two phases (in exemplifying way it is showed the mincer with basic machine.

The phase n. 1 for the **grinding group Enterprise** is performed on a working ground following the under reported order:

1. Insert in the pipe union (1) in the order: Archimedean screw (2), cutting knife oriented as in figure and inserted in the dragging pivot (3), drilled plate (4) inserted in the pipe union place (1);
2. Screw down and tighten the blockage wheel (5).

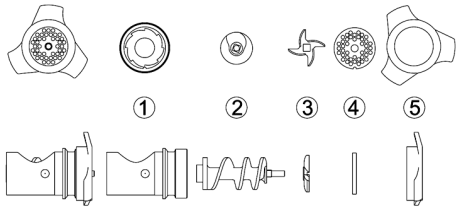

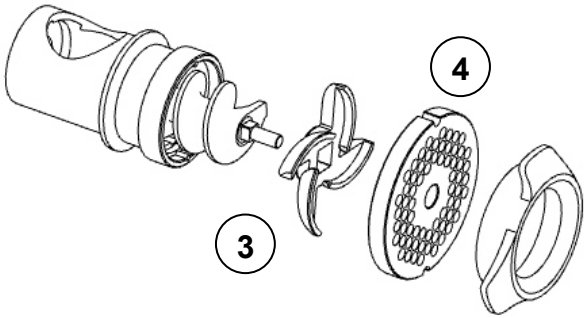

The phase n. 1 for the **Half Unger grinding group** is performed on a work round following the under reported order:

1. Insert in the pipe union (1) in the order: Archimedean screw (2), first plate (3), cutting knife oriented as in figure and inserted in the dragging pivot (4), second drilled plate (5) inserted in the pipe union place (1);
2. Screw down and tighten the blockage wheel (6).

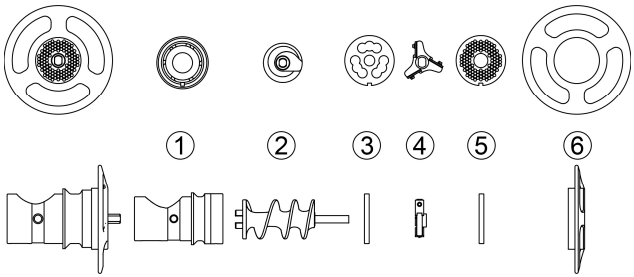

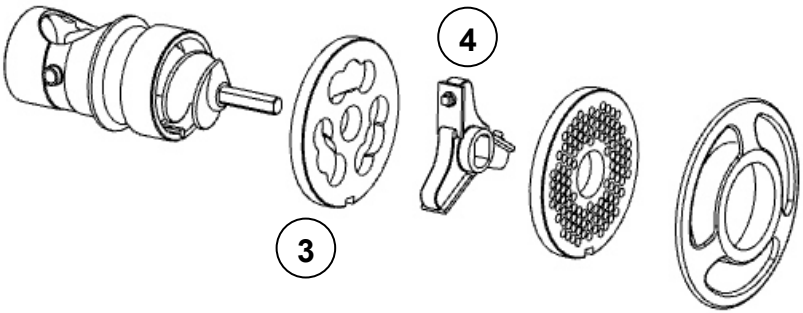

The phase n. 1 for the **Total Unger grinding group** is performed on a work round following the under reported order:

1. Insert in the pipe union (1) in the order: Archimedean screw (2), first plate (3), cutting knife oriented as in figure and inserted in the dragging pivot (4), second drilled plate (5) inserted in the pipe union place (6), third drilled plate (7) inserted in the pipe union place (1);
2. Screw down and tighten the blockage wheel (8).

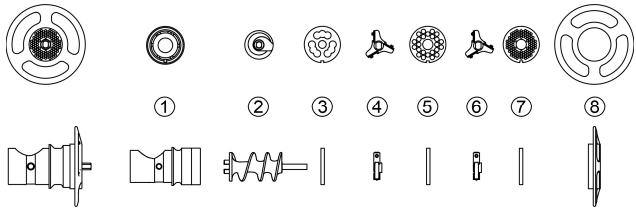

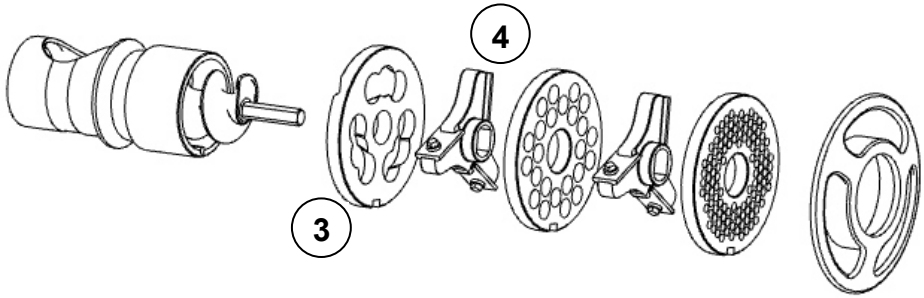

The phase 2 is performed on the machine:

1. Insert up to the blow the complete grinding group (B) on the machine (A);
2. Tighten the mouth stop knob (C) up to when the grinding group (B) is blocked on the machine (A);
3. Insert the hopper (D) in the machine neck
4. In these conditions the machine is ready to work.

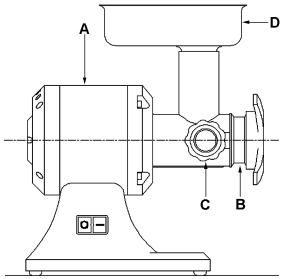

The disassembly activities of the grinding group from the machine are performed following in the backwards way the assembly phases previously described, starting from the phase n. 2 passing to the phase n. 1.
For a plate and knife better improvement and duration it is advised **to keep them always coupled**.

GRINDING GROUP ROTATION

The operations here follow indicated must be performed from the machine maintenance man (**skilled personnel in the electric maintenance field of the industrial machines**).
For machines fed with three phase voltage (3 PE AC 400V 50Hz), slacken lightly the blockage wheel so as don't make a strong pressure on the drilled plate as for the cutting knife. During the switching on verify that the Archimedean screw / grater roll **rotates in anticlockwise sense**.
If there is an clockwise rotation, switch off the machine disconnecting the plug, disassembly it, disconnect two phase conductors and invert them of position.

FUNCTIONING DESCRIPTION

The control devices are designed and manufactured so as much sure and reliable and resistant to the service normal stresses, to the foreseeable strains and to the external agents. Besides they are clearly visible, locatable and marked from a suitable marking. Here follow the main control devices are showed:

TYPE / COLOR	REFERENCE / DESCRIPTION
button / black	"0" / button for the machine stop control
Button / white	"I" / button for the machine start control

STARTING

The machine starting is possible only with a voluntary action on the control device foreseen for this aim: white button "I" for the machine starting control.
NB. In the TI 32R model the starting is possible only with the inserted hopper and correctly positioned.

STOP

For the stop control push the black button "0". In case of momentary or extended stop, before to get in function the machine, all food products must be removed within the machine: follow the indications relative to the grinding group disassembly.

FUNCTIONING SAFETY

If the machine is under stress, or is submitted to too long functioning times or submitted at overloaded, the same stops immediately for the thermal protection functioning. In this case wait that it is completely cooled before proceeding to the starting function. The TI 32R model has a safety device on the hopper. The incorrect positioning or the hopper lacked use involves the machine not functioning.

VOLTAGE LACKING

In case of electric feeding breaking or if the machine is disconnected from the electric net, this last one will be able to be restarted only following the starting function, **after the electric feeding back or the reconnection to the electric net**.

CONTROLS AND VERIFICATIONS BEFORE STARTING

VERIFICATION / CONTROL BEFORE THE STARTING	MODALITY AND CHECKS
Check that: Extraneous objects **aren't on the machine, inside the hopper, inside the machine neck**	Sight control of the indicated parts, to check of objects or extraneous bodies lacking as for example different tools, clothes, etc… and that there isn't however the food product. In case of presence, provide with their removal.
Check the cleaning: ➢ **Of the machine neck internal parts and of the grinding group** ➢ **Of the pusher** ➢ **of the machine external surface**	All indicated parts surfaces, before the machine use must be checked visually to verify their cleaning. For the sight check of the grinding group internal parts, provide with its disassembly. In case of molds presence or other type of dirtiness, provide with the cleaning procedure in accordance with the chapter 5 indications
Check the integrity: ➢ **of the fixed protections,** ➢ **of the loading hopper,** ➢ **of the machine neck,** o **of the machine body**	All fixed protections, etc.., must perform the function for which have been foreseen. Indicated parts sight check to verify their integrity in their surface external part. The parts must be however changed at the first erosion signals or breaking.
Check the functionality: ➢ **of the control system parts / safety control;** ➢ **Of the control devices.**	All devices must perform the function for which have been foreseen. Control directly the devices so that these ones determine the waiting function. The actuators and all parts must be however changed to the first erosion signals or breaking.
Check the absence: ➢ **Of strange noises after the starting**	During the functionality checking of the control devices, if there are strange noises, due for example to a seizing or mechanical breaks, stop immediately the machine and activate the maintenance service.
Check the absence: ➢ **Of oil trails both on the machine support ground both in the Archimedean screw**	Both during the working, both at the end of every work, both in the assembly moment of the grinding group, check the oil trails absence in the indicated parts. If there are some fluid drops stop immediately the machine and activate the maintenance service.

For any intervention type or for the parts change that are damaged, activate the maintenance service. The possible change must happen with manufacturer original products or at least of quality, safety and equivalent characteristics. For analysis contact the Authorized Assistance Center.

PUT IN FUNCTION

The machine operator can put in function the machine following in order the under reported indications:

1. Controls positive result for the preparation preliminary operations,
2. Controls positive result for the electric feeding,
3. Controls positive for the hopper inserting and positioning
4. Checks positive result for the grinding group assembly,
5. Checks positive result for the Archimedean screw correct rotation,
6. Checks positive result / verifications before starting and periodical,
7. Finalized checks positive result and verify the all safety conditions respect,
8. Plug connection in opportune current socket,
9. Place a gathering basin in the machine anterior zone in correspondence of the ground meat exit zone,
10. Put in the machine left side and start the machine acting the control device of start "I",
11. Introduce manually the food product within the machine neck and drive it towards the Archimedean screw using the pestle in equipment.
12. At the end of the food product introduction, or when from the drilled plate doesn't come out more the product, stop the machine acting the control device of stop "0".

It is recommended to make not work the machine in vain, without the food product.

SWITCHING OFF

In succession, the switching off must follow what here under indicated:

1. Before the switching off wait the food product exile conclusion from the drilled plate,
2. Stop the machine acting the control device of stop "0",
3. Disconnect the machine plug from the feeding socket,
4. Perform the cleaning interventions

UNBLOCK IN CASE OF OBSTACLE

During the working, or during the Archimedean screw rotation, due to the food products introduction with not homogeneous parts, as for example bones, or other, the machine could block.
The same situation can determine after an electric feeding break, or when the machine is stopped with inside the food product.

To be able to resume normally the working, the grinding group must be disassembled, with the different differentiation: **the disassembly must not happen slacking the blockage wheel, but slacking the grinding mouth block knob**.

CHAP. 5. MAINTENANCE, BREAKS RESEARCH AND CLEANING

MAINTENANCE MAN REQUIREMENTS

With the term "**maintenance**" must not be understood only the periodical check of the machine normal functioning but also the analysis and the consequent remedy of all causes that for any matter put it out of service. It is absolutely necessary that for the **maintenance, cleaning, parts change and breaks research** activities performed from the user, **this work is entrusted to skilled personnel**, competence and authorized from the employer.
All operations of **maintenance, cleaning and parts change**, none excluded, must be definitely performed with the machine completely stopped and insulated from the external feeding sources.

MAINTENANCE PRESCRIPTIONS

PROTECTIONS REMOVAL AND/OR PROTECTION DEVICES

For any interventions described in the present **chapter, it is necessary to remove from their position some fixed protections.**
The removal can happen only from the maintenance man.
At the end of the interventions, these protections must be replaced and blocked in their original position, with the fastening systems which were foreseen before the intervention.
The maintenance responsible must disconnect completely the machine, as here follow reported, before to proceed with the removal of a fixed protection and/or with the element change.

INSULATION FROM THE EXTERNAL FEEDING SOURCES
Before to perform any operation of **maintenance, cleaning and parts change**, the external feeding sources must be sectioned and insulated.

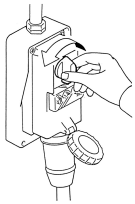

Position on "zero" the protection device placed upstream of the electric equipment feeding line.

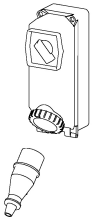

Disconnect the general sectioning device and provide to protect the plug with proper systems

BREAKS OR DAMAGES RESEARCH AND MOVING ELEMENTS UNBLOCKING

Here follow are indicate the interventions for the **breaks or damages research and moving elements unblocking** which can be performed from **maintenance men**.

TYPE	POTENTIAL CAUSE/S	MODALITY AND COMPARISONS
Net voltage lacking	General Black out	Contact the electric energy distributor
	Fuses or magneto thermals intervention place upstream of the machine feeding line	After having eliminated the causes that have determined the protection device intervention, restore it. In case of problem persistency contact an electrician technician.
Functioning intervention	Protection device intervention inside the machine	Contact an electrician technician: after having eliminated the causes that have determined the protection device intervention, restore it. **In case of fuses intervention**, change them with types of the same model, calibration and intervention curve.
	Cause/s not identifiable	Contact directly the Authorized Assistance Center
The machine doesn't function: the Archimedean screw doesn't rotate	Feeding voltage lacking.	Check and restore the electric energy.
	Hopper not inserted or bad positioned only on model TI 32R	Insert or reposition the hopper
	Sectioning devices set on "OFF".	Turn the sectioning devcies in the position "ON"
	Intervened fuses or not functioning magneto thermals.	Change the intervened fuses, check the magneto thermal switches state.
	Lacked running button functioning	Check the START button efficiency and eventually contact directly the Authorized Assistance Center.
	Thermal intervention due to the overheating	Wait the complete cooling before the machine restarting

EXTRAORDINARY MAINTENANCE

For the intervention of **extraordinary maintenance**, consequent to breaks or revisions or mechanical and electric damages, it is necessary an intervention request directly to the Authorized Assistance Center.
The instructions about the extraordinary maintenance don't appear in the present instruction manual for the use and so must be explicitly requested to the manufacturer.

CLEANING

It is forbidden to clean by hand the organs and the elements in motion.
All cleaning interventions must be started only and exclusively, **after having unloaded the machine with the food product in working and having insulated from the electric feeding source and from external energy**.

The machine, the electric equipment and the machine board components **must not be ever washed utilizing water, and not in any kind of jets form and quantity; so, without "bucket" nor "rubber" nor "towel"**. Don't put ever directly the machine in the sink or under the tap.

The machine hygiene level classification and the associated equipment, for the foreseen use, is 2 (two): machine that, after an hygiene risk evaluation, is in conformance with applicable international standards requirements, but requests a programmed disassembly for the cleaning.

FREQUENCY	PERSONNEL	MODALITY
At the end of every shift work and however before the daily use	Operator	All the surface and the machine parts destined to come in contact with the food product or with **the food zones** (hopper internal surface, machine neck and the grinding group, the pestle) and the **jets zones** (machine external surface**)** must be cleaned and disinfected with the under reported modalities. For the grinding group disassembly activities see the previous descriptions. ➢ **Scrape the surfaces from the possible food product residuals** (for example with plastic scrapers); ➢ **Clean all the food zone surfaces and jets zone with soft dampened clothes** (not draining) **with detergent diluted in hot water** (also common soap for dishes is good). Don't soak them. With a towel clean inside the grinding mouth. Use specific products for steel,or for the aluminum: which must be liquids (not in cream or pastries however abrasive) and above all must not contain chlorine. Against the fat substances the denatured alcohol. ➢ **Rinse with cleaned hot water and successively dry all food zone surfaces and jets zone** with soft clothes that don't lose coats. ➢ Only the STAINLESS steel parts of the mincer group can be washed also in dishwasher, **while the aluminum ones or in cast iron showed in the following table, cannot be washed in dishwasher.** ➢ The grinding group re assembly must happen only after a working requirement, leave the pieces wrapped in a dry soft clothes that doesn't lose coats. **DISINFECTION** ➢ Use detergents with PH neutral not oxidizing ➢ If the hot water is used (> 60°C) use exclusively demineralised water. ➢ If other products are used, these ones must be adequate to the material type. ➢ For the machines with aluminium parts or in cast iron (see following table) it is possible to use peracetic acid products. **PERIODS OF LONG INACTIVITY** ➢ During the machine **long inactivity periods** provide to pass vigorously on all steel surfaces (especially if stainless) a clothes soaked of Vaseline oil so that to spread a protective veil. **THINGS NOT TO DO BEFORE OR WHILE CLEANING:** ➢ Enter towards the moving elements without to be previously checked of their stop; ➢ Enter towards the moving elements without have stopped it in safety stop (blockage in zero position of the electric feeding sectioning devices) **PRODUCTS NOT TO USE:** ➢ Compressed air with jets towards the zones with flour warehouses and in general towards the machine; ➢ Vapor equipment; ➢ Detergent that contains **CLORO** (also if diluted) or its compounds as: the bleach, the muriatic acid, products to clear the drain, caustic soda products for the marble cleaning, in general decalcifying, etc … can attack the steel composition, staining and oxidizing it unavoidable. The only above described products fumes can oxidize and in any case corrode the steel; ➢ Steel wool, brushes or abrasive discs produced with other metals or alloys (ex. Common steel, aluminum, brass, etc…) or tools that have previously cleaned other metals or alloys, that except to scratch the surface. ➢ Detergents in abrasive dust; ➢ Fuel, solvents or inflammable and/or corrosive fluids; ➢ Substances used to clean the silver.

PRODUCTS IDENTIFICATION TABLE WITH MINCER GROUP IN ALUMINUM OR IN CAST IRON

MOD	ALUMINUM / CAST IRON (Codes)
TS12	**FTS106** **FTS106U** **FTS107** **FTS107U**
TI12	**FTI106** **FTI106U** **FTI107** **FTI107U**
TS22	**FTS116** **FTS116U** **FTS116UT** **FTS117** **FTS117U** **FTS117UT**

MOD	ALUMINUM / CAST IRON (Codes)
TI22	**FTI116** **FTI116U** **FTI116UT** **FTI117** **FTI117U** **FTI117UT**
TS32 ECO	**FTS146** **FTS147**
TI32 ECO	**FTI146** **FTI147**
TI12R	**FTI106R** **FTI106RU** **FTI107R** **FTI107RU**

MOD	ALUMINUM / CAST IRON (Codes)
TI22R	**FTI116R** **FTI116RU** **FTI116RUT** **FTI117R** **FTI117RU** **FTI117RUT**

CHAP. 6. SELLING

The crossed container symbol on the machine shows that the product at the end of its useful life must be collected separately from other refusals

If we decide to not use ever the machine because it is obsolete, damaged or worn, its out of service must be entrusted to specialized and trained personnel. At the end of the dismantling activities all identification plates and other document must be destroyed. The machine can be sold without the possibility to reduce it in small pieces; it is sufficient to disconnect the main groups that compose it and to send them for the scrapping.

Don't sell the machine like mixed urban refusal, perform the waste separation.

The machine collection or harvest systems are:

- Collection through distributor consortium
- Delivery possibility to the machine distributor equivalent to the purchasing certificate of a new machine.

In the machine there aren't dangerous substances with potentially negative effects on the ambient and on the human health. It is fundamental that the purchasers contribute to the reuse, to the recycling and to the other forms of machine restoring. It is the employer obligation to be aware of the actual laws of own country and work so to be comply with these legislations.

It is forbidden and besides liable of penalties to leave the machine and the electric equipment in the ambient.

•

CHAP. 7. MANUFACTURING MATERIALS

In accordance with the functioning and production requirements, the machine can be constituted with different typology of manufacturing materials.

GROUP	MATERIALS TYPOLOGY				
	Stainless Steel 18/8	Stainless Steel AISI 304	Stainless Steel AISI 440	Cast iron treated for foods	Aluminum treated for foods
Machine body and hopper	●				
Knifes and drilled plate			●		
Grinding group **Enterprise**		●		●	●
Grinding group half **Unger**		●		●	
Grinding group **Unger** total		●		●	
Grinding group T... 12 / T… 22		●		●	●
Grinding group T… 32		●			
Grinding group T… 32 ECO		●		●	
Grinding group T… 32 R		●			

CHAP. 8. OPTIONAL

TOMATO MASHER OPTIONAL

The **tomato masher** is an optional accessory for the set machines 12 and 22. It is able to squeeze tomatoes, fruit (without stone) and vegetable (cooked).
The food product load in the hopper happens manually; always manually and with the pestle help the food product is introduced in the grinding neck towards the Archimedean screw.

The **tomato masher application** assembly on the machine is made in the following phases (in exemplification way it is reported the machine with the basic body)

1. assemble the pipe union 2 and tighten it with the proper accessories block knob 1
2. Insert the Archimedean screw 3 inside the pipe union 2
3. Insert the filter 4
4. Block the filter with the wheel 5
5. Insert and position the drain 6
6. Arrange the salvage dump containers for the puree and for the reject
7. For the functioning refer to the mincer instruction

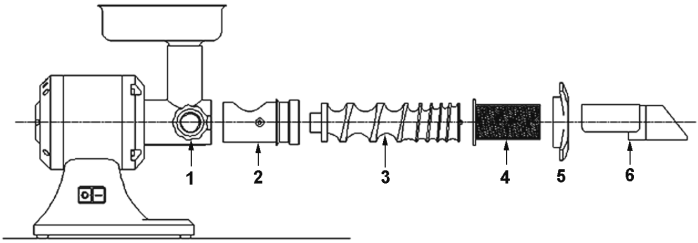

PUREE MASHER OPTIONAL

The puree masher is an optional accessory for the set machine 12 and 22. It is able to prepare potatoes or boiled pulses puree.
The food product load in the hopper happens manually; always manually and with the pestle help the food product is driven towards the crushing roll.

The **puree masher application** assembly on the machine is performed in the following phases (in exemplification way it is reported the machine with the basic body).

1. Assemble the puree masher body **2** and tighten it with the block accessories knob **1**
2. Insert the pivot with roll **3** inside the puree masher body **2**
3. Assemble the closure stopper **4**
4. Block the closure stopper **4** though two knobs **5**
5. Insert the hopper **6**
6. Arrange the salvage dump containers for the vegetable puree
7. For the functioning refer to the mincer instructions

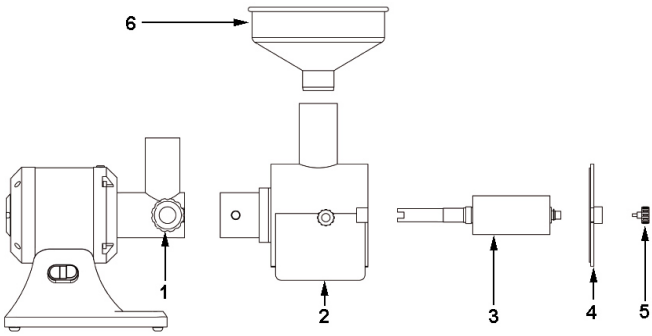

SCHEDE ELETTRONICHE
ELECTRONIC CARDS
FICHAS ELECTRÓNICAS
FICHES ELECTRONIQUES
LEITERPLATTEN
ЭЛЕКТРОННЫЕ СХЕМЫ

T.. 12 / T.. 22 (1N PE AC 230V 50Hz)

PE = conduttore di terra
PDC = protezione termica
W1 = ponte
S2 = pulsante di stop
S1= pulsante di start
F = fusibile 500mA
C = condensatore
2-3 = motore
1-4 = 2 AC 230V 50Hz
L1-N1 = motore
L-N = 2 AC 230V 50Hz

PE = ground conductor
PDC = thermal protection
W1 = bridge
S2 = stop button
S1= start button
F = fuse 500mA
C = condenser
2-3 = motor
1-4 = 2 AC 230V 50Hz
L1-N1 = motor
L-N = 2 AC 230V 50Hz

PE = conductor de tierra
PDC = protección térmica
SQ1 = micro interruptor
S2 = botón de stop
S1= botón de start
F = fusible 500mA
C = condensador
2-3 = motor
1-4 = 2 AC 230V 50Hz
L1-N1 = motor
L-N = 2 AC 230V 50Hz

PE = conducteur de terre
PDC = protection thermique
W1 = pont
S2 = poussoir de stop
S1= poussoir de start
F = fusible 500mA
C = condensateur
2-3 = moteur
1-4 = 2 AC 230V 50Hz
L1-N1 = moteur
L-N = 2 AC 230V 50Hz

PE = erdungsleiter
PDC = thermoschutzschalter
W1 = brücke
S2 = stopp-taste
S1= start-taste
F = sicherung 500mA
C = kondensator
2-3 = motor
1-4 = 2 AC 230V 50Hz
L1-N1 = motor
L-N = 2 AC 230V 50Hz

PE = заземляющий провод
PDC = термическая защита
W1 = мост
S2 = кнопка стоп
S1= кнопка старт
F = предохранитель 500m
C = конденсатор
2-3 = мотор
1-4 = 2 AC 230V 50Hz
L1-N1 = мотор
L-N = 2 AC 230V 50H

AZP – TGFM02

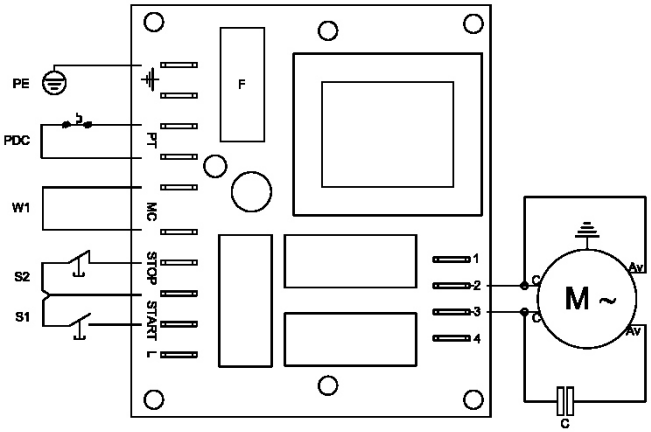

PTM02

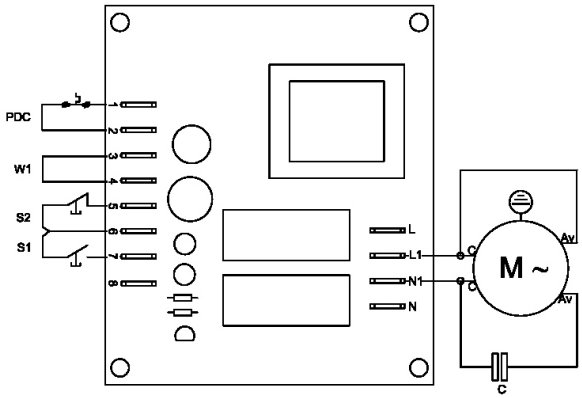

	T.. 12 / T.. 22 (3Ph PE AC 400V 50Hz)
U – V- W = motore PE = conduttore di terra S1= pulsante di start S2 = pulsante di stop W1 = ponte PDC = protezione termica F = fusibile 500mA A = 3 AC 400V 50Hz 1-3 = alimentazione 400V 1-2 = alimentazione 230V B = alimentazione 400V C = alimentazione 230V U – V- W = motor PE = ground conductor S1= start button S2 = stop button W1 = bridge PDC = thermal protection F = fuse 500mA A = 3 AC 400V 50Hz 1-3 = feeding 400V 1-2 = feeding 230V B = feeding 400V C = feeding 230V U – V- W = motor PE = conductor de tierra S1= botón de start S2 = botón de stop SQ1 = micro interruptor PDC = protección térmica F = fusible 500mA A = 3 AC 400V 50Hz 1 -3 = alimentación 400V 1 – 2 = alimentación 230V B = alimentación 400V C = alimentación 230V U – V- W = moteur PE = conducteur de terre S1= poussoir de start S2 = poussoir de stop W1 = pont PDC = protection thermique F = fusible 500mA A = 3 AC 400V 50Hz 1-3 = alimentation 400V 1-2 = alimentation 230V B = alimentation 400V C = alimentation 230V U – V- W = motor PE = erdungsleiter S1= start-taste S2= stopp-taste W1 = brücke PDC = thermoschutzschalter F = sicherung 500mA A = 3 AC 400V 50Hz 1-3 = speisung 400V 1-2 = speisung 230V B = speisung 400V C = speisung 230V U – V- W = мотор PE = заземляющий провод S1= кнопка старт S2 = кнопка стоп W1 = мост PDC = термическая защита F = предохранитель 500mA A = 3 AC 400V 50Hz 1 -3 = питание 400V 1 – 2 = питание 230V B = питание 400V C = питание 230V	**SR978 – SR1078 – TGM8** 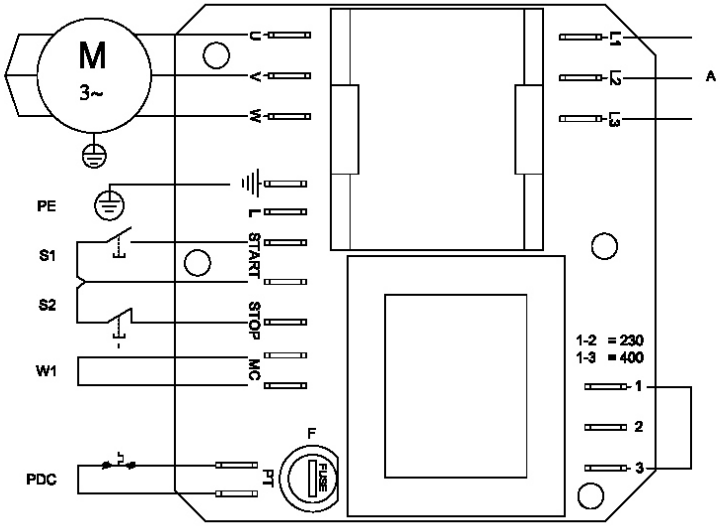 **PTF04** 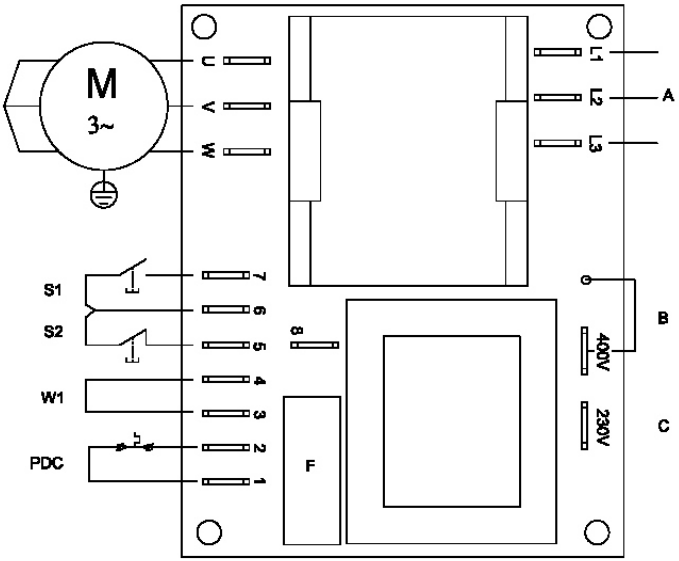

	T.. 32 (1N PE AC 230V 50Hz)
PE = conduttore di terra A = 2 AC 230V 50Hz PDC = protezione termica W1 = ponte S1= pulsante indietro S2 = pulsante avanti S3 = pulsante stop C = condensatore PE = ground conductor A = 2 AC 230V 50Hz PDC = thermal protection W1 = bridge S1= back button S2 = forward button S3 = stop button C = condenser PE = conductor de tierra A = 2 AC 230V 50Hz PDC = protección térmica W1 = puente S1 = botón atrás S2 = botón adelante S3 = botón stop C = condensador PE = conducteur de terre A = 2 AC 230V 50Hz PDC = protection termique W1 = pont S1= poussoir en arrière S2 = poussoir en avant S3 = poussoir stop C = condensateur PE = erdungsleiter A = 2 AC 230V 50Hz PDC = thermoschutzschalter W1 = brücke S1= taste zurück S2 = taste vor S3 = taste stopp C = kondensator PE = заземляющий провод A = 2 AC 230V 50Hz PDC = термическая защита W1 = мост S1= кнопка назад S2 = кнопка вперед S3 = кнопка стоп C = конденсатор	**TGM3 230V** 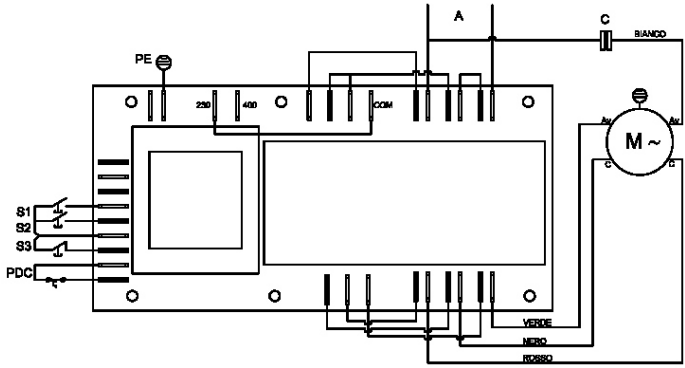 **ITR-S-2 230V** 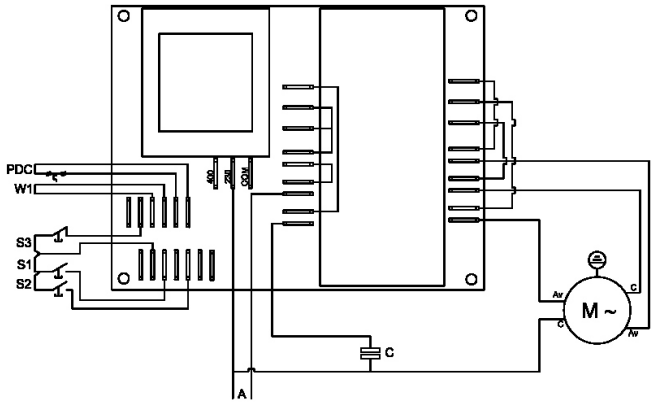

	T.. 32 (3Ph PE AC 400V 50Hz)
PE = conduttore di terra A = 3 AC 400V 50Hz PDC= protezione termica W1 = ponte S1= pulsante indietro S2 = pulsante avanti S3 = pulsante stop PE = ground conductor A = 3 AC 400V 50Hz PDC= thermal protection W1 = bridge S1= back button S2 = forward button S3 = stop button PE = conductor de tierra A = 2 AC 230V 50Hz PDC= protección térmica W1 = puente S1 = botón atrás S2 = botón adelante S3 = botón stop PE = conducteur de terre A = 3 AC 400V 50Hz PDC= protection thermique W1 = pont S1= poussoir en arrière S2 = poussoir en avant S3 = poussoir stop	**TGM3 400V** 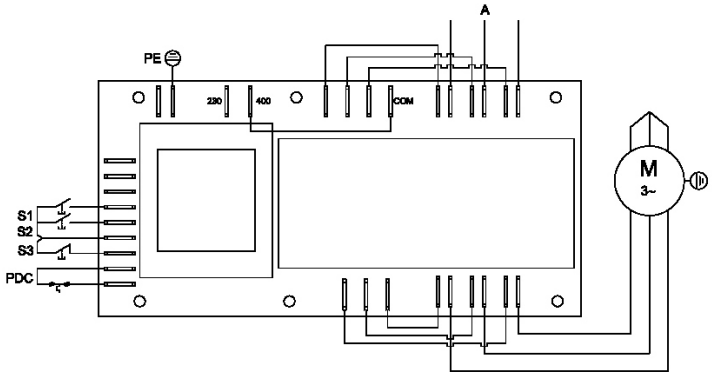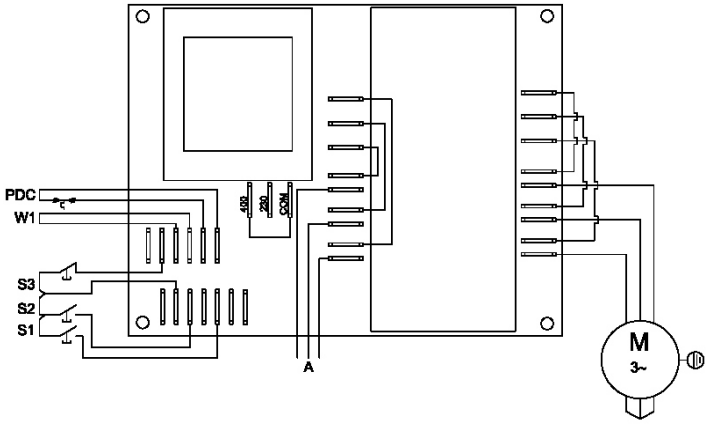
PE = erdungsleiter A = 3 AC 400V 50Hz PDC=thermoschutzschalter W1 = brücke S1= taste zurück S2 = taste vor S3 = taste stopp PE = заземляющий провод A = 3 AC 400V 50Hz PDC= термическая защита W1 = мост S1= кнопка назад S2 = кнопка вперед S3 = кнопка стоп	**ITR-S-2 400V**